SUPPLY NETWORK ANALYZER

CVM-144 (HAR) SERIES

(Harmonics)

INSTRUCTION MANUAL

(M98170501-03 / 03B)

Ó **CIRCUTOR S.A.**

CONTENTS page

1.- DELIVERY SPOT CHECK 3
2.- MAIN FEATURES 4
3.- MODELS 7
4.- INSTALLATION AND START-UP 9
4.1.- Installation 9
4.2.- CVM-144 connection terminal arrangement (power supply connection terminal) 12
4.3.- CVM-144 connection terminal arrangement (Expansion card) 13
4.4.- Connection drawing for the CVM-144 : 20
5.- OPERATION MODE 25
6.- SET-UP PROCEDURE 27
6.1.- Phase-to-Phase or Phase-to-Neutral voltages 28
6.2.- Voltage display mode 28
6.3.- Voltage transformation ratio 29
6.4.- Current Transformer Primary 30
6.5.- Transformation ratio for the measurement of neutral and residual current 31
6.6.- Setting power demand utility screens 34
6.7.- Initial screen setting 35
6.8.- Setting of the display shutdown time 35
6.9.- Clearing energy counters 36
6.10.- THD or D setting 37
6.11.- Additional screens when RELAY OUTPUTS (2 relays) are equipped 38
6.12.- Additional screens with 4 - 20 mA outputs y inputs 45
7.- SPECIFICATIONS 50
8.- SAFETY CONSIDERATIONS 52
9.- MAINTENANCE 52
10.- TECHNICAL SERVICE 52
11.- CVM-144 COMMUNICATIONS 54
11.1.- To take into account ! : 54
11.2.- RS-485 type connection to a RS-232 type input of a PC 55
11.3.- RS-232 type connection to a RS-232 type input of a PC 56
11.4.- MODBUS © protocol 57
12.- APPENDIX A: Second SET-UP of the CVM-144 64
12.1.- Communication setting 64
12.2.- SET-UP locking or unlocking 65
13.- APPENDIX B: Insertion of an expansion module into a CVM-144 unit 67

1.- DELIVERY SPOT CHECK

This manual is issued to help all the **CVM-144** users to install and use it in order get the best from it. After receiving the unit, please check the following points:

(a) Does this device correspond to your order specifications?

(b) Check if any damage was done during the shipment process.

(c) Verify that it includes the correct instruction manual.

The manual you hold in your hands contains information and warnings about the **CVM-144** that the user should respect in order to guarantee a proper operation of all the instrument functions and keep its safety conditions.

Before powering the instrument for the first time, verify following points:

(a) **Power supply: <u>see rear part of your CVM-144</u>**

- ❑ **Standard**: **230 V a.c.** Single-phase, Frequency: 50 ... 60 Hz
- ❑ **SDC Model : 24 .... 120 V c.c.**
- ❑ Other supply voltages, on request.

(b) Maximum measuring voltage:

- ❑ **Standard**: **300 V a.c. phase-neutral / 520 V a.c. between phases**
- ❑ Other models: on request

CVM144 - measuring 110V: 110 V a.c. phase-to-neutral /190 V a.c. phase-to-phase
CVM144 - measuring 500V: 500 V a.c. phase-to-neutral /866 V a.c. phase-to-phase

(c) Maximum measurable current: Current transformer of In / 5 A a.c.

2.- MAIN FEATURES

The **CVM-144** power meter is a programmable measuring instrument, offering several operation possibilities selectable in its SET-UP option. Before power supplying the instrument, read the **CONNECTIONS and SET-UP** sections and choose the most suitable operation mode for getting your desired data.

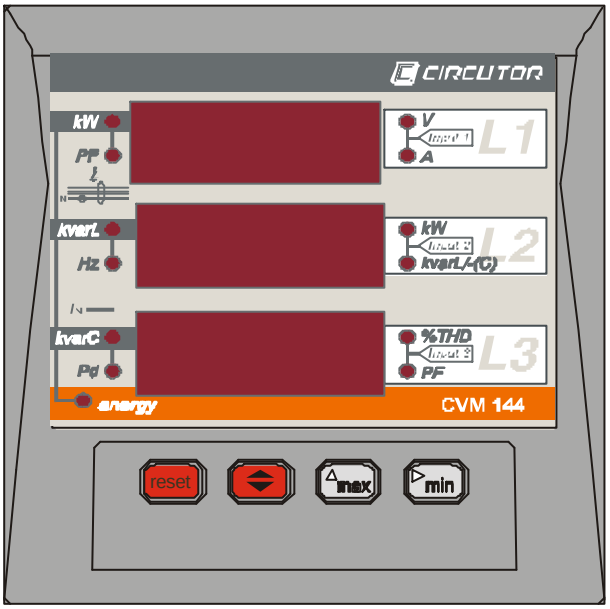

The CVM-144 is an instrument which measures, calculates and displays all the main electrical parameters at any electrical network (balanced or not). The measuring is true RMS value, through three a.c. voltage inputs and three a.c. current inputs (from Current Transformers .../ 5A).

By means of an internal microprocessor it simultaneously measures:

Parameter	Symbol	L1	L2	L3	Average
Voltage (phase-neutral)	*V*	x	x	x	
Voltage (phase-phase)	*V*	x	x	x	
Current	*A*	x	x	x	xx
Frequency	*Hz*	x			
Active power	*kW*	x	x	x	x
Reactive power L	*kvarL*	x	x	x	x
Reactive power C	*kvarL /**(-C)***	x	x	x	x
Apparent power	*kVA*				xx
Power factor	*PF*	x	x	x	x
Cos φ					xx
Power demand	*Pd*	x			
kW h	*energy*				x
kvarhL	*energy*				x
kvarhC	*energy*				x
Neutral current	I_N	x			
Voltage THD	*% THD- V*	x	x	x	
Current THD	*% THD- A*	x	x	x	
Individual harmonic current content (Up to the 15th)		x	x	x	
Analog inputs	Input	xx			
Earth leakage (residual) current	⚡	x			

Available: **x:** Display and communications **xx:** Communications

The CVM-144 delivers the visualization of above listed parameters by means of three 4-digit, led type, displays. Up to 3 parameters can be simultaneously read in the screen.

OTHER FEATURES

- Low-size (144 x 144 mm), panel-mounting analyzer.
- True R.M.S. measuring system.
- Collection in memory of **maximum and minimum** values.
- Energy measurement (indication through a lighting led)
- RS-485 or RS-232 type communication to a PC (optional)

- Maximum demand determination: kW, kVA, AIII or line-current.

3.- MODELS

Model	Current measurement
CVM-144	Shunts
CVM-144-ITF	Isolated ITF

Code	Expansion modules	Card	Communication	Relay outputs	Digital inputs	Analogue inputs	Analogue outputs	Measurement of neutral and residual currents
7 70 570	Mod. CVM 144 C2			2				
7 70 571	Mod. CVM 144 C2 Analogue	0571		2		**3***	1*	
7 70 572	Mod. CVM 144 C2-Currents	0572		2				X
7 70 569	Mod. CVM 144 C2 Digital			2	4			
7 70 573	Mod. CVM 144 RS485-C2	0573	RS485	2				
7 70 574	Mod. CVM 144 RS485-C2 Analogue	0574	RS485	2		**3***	1*	
7 70 575	Mod. CVM 144 RS485-C2-Currents	0575	RS485	2				X
7 70 579	Mod. CVM 144 RS485-C2 Digital	0579	RS485	2	4			
7 70 576	Mod. CVM 144 RS232-C2	0576	RS232	2				
7 70 577	Mod. CVM 144 RS232-C2 Analogue	0577	RS232	2		**3***	1*	
7 70 578	Mod. CVM 144 RS232-C2-Currents	0578	RS232	2				X
7 70 580	Mod. CVM 144 RS232-C2 Digital	0580	RS232	2	4			

Optionally 2 analog inputs and 2 analog outputs.

Code	Complete Kit	Communications	Relay Outputs	Current inputs
7 70 591	CVM-144-ITF-RS485-C2	RS-485	2	Isolated ITF

Each CVM 144 supports as a maximum 1 expansion module

4.- INSTALLATION AND START-UP

The manual you hold in your hands contains information and warnings that the user should respect in order to guarantee a proper operation of all the instrument functions and keep its safety conditions. The instrument must not be powered and used until its definitive assembly on the cabinet's door.

If the instrument is not used as manufacturer's specifications, the protection of the instrument can be damaged.

When any protection failure is suspected to exist (for example, it presents external visible damages), the instrument must be immediately powered off. In this case contact a qualified service representative.

4.1.- Installation.

Before powering the instrument for the first time, verify following points:

a.- **Power supply: see rear part of your CVM-144**

- ***Standard supply*** *: Single-phase* ***230 V*** *~ (a.c.)*
  - *Frequency : 50 - 60 Hz*
  - *Supply voltage tolerance : - 10 % / + 15*
  - *Connection terminal : Terminals 1 - 2 (Power supply)*
  - *Burden : 5 VA*
- ***SDC Model : 0.24.... 120 V c.c. (continua)***
  - *Supply voltage tolerance : - 20 % / + 15*
  - *Connection terminal : Terminals 1 - 2 (Power supply)*
  - *Burden :* 2,2 W

- *On request: other voltages*

b.-Maximum voltage at the voltage measuring circuit:

- ❑ **Standard : 300 V a.c. phase-to-neutral/520 V a.c. phase-to-phase 45 to 65 Hz**
- ❑ Other models on request :

CVM-144-measuring 500 V: 500 Va.c. phase-to-neutral/866 Va.c. phase-to-phase
CVM-144-measuring 110 V: 110 Va.c. phase-to-neutral/190 Va.c. phase-to-phase

c.- Maximum allowable current : Current Transformer of In / 5 A a.c.

d.- Operation conditions :

- Operation temperature range : -10 to +50 ºC
- Humidity : 5 to 95 % R.H. non-condensing
- Altitude : below 2000 m

e.- Safety :

- Designed to meet protection class III- 300 V a.c. as (EN 61010).
- Protection against electric shock by class II double-isolation

Mounting: ⚠

Instrument is to be mounted on panel (cut-out 138^{+1} x 138^{+1} mm, as per DIN 43 700). All connections keep inside the cabinet.

Note that with the instrument powered on, the terminals could be dangerous to touching and cover opening actions or elements removal may allow accessing dangerous parts. Therefore, the instrument must not be used until this is completely installed.

The instrument must be connected to a power supply circuit protected with gl type (IEC 269) or M type fuses rated between 0.5 and 2 A. This circuit should be provided with a circuit breaker or any equivalent element to connect (ON) or disconnect (OFF) the instrument from the power supply network. The supply and measuring voltage circuits will be both connected through a wire with a minimum cross-section of 1 mm^2.

The line of the current transformer secondary will have a minimum cross-section of 2,5 mm^2.

4.2.- CVM-144 connection terminal arrangement (power supply connection terminal)

(see lable on the rear part)

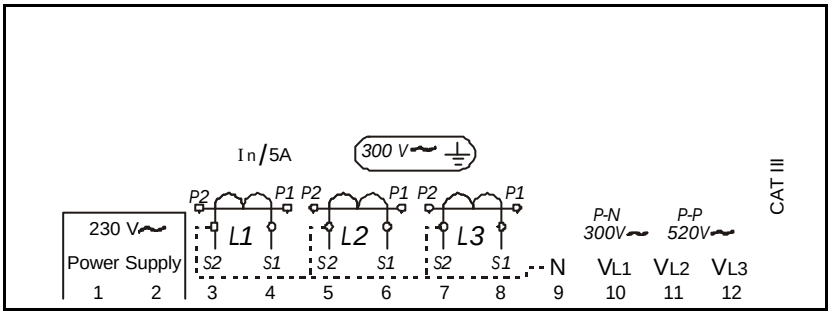

No.	Terminal description
1	*Power supply AL1
2	*Power supply AL2
3	IL1 S2 Current measurement
4	IL1 S1 Current measurement
5	IL2 S2 Current measurement
6	IL2 S1 Current measurement

No.	Terminal description
7	IL3 S2 Current measurement
8	IL3 S1 Current measurement
9	Neutral
10	VL1 Measurement
11	VL2 Measurement
12	VL3 Measurement

NOTE: Terminals 3, 5, 7 are internally connected to the 9 terminal (Neutral)

... / 5 A current inputs are isolated for the ITF model.

* Lower connection terminal (SDC Model)	
Nº	Descripción Borne
1	*Supply voltage (+) d.c.*
2	*Supply voltage (-) d.c.*

4.3.- CVM-144 connection terminal arrangement (Expansion card)

(see lable on the rear part)

4.3.1.- Basic card (770 570, 770 573 and 770 576)

Description	Card connection terminal arrangement
Mod CVM 144 -C2 (Code: 7 70 570)	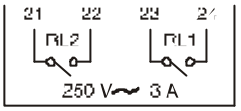
Mod CVM 144 RS485-C2 (Code: 7 70 573)	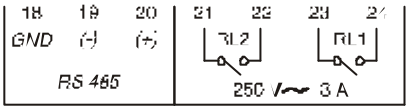
Mod CVM 144 RS232-C2 (Code: 7 70 576)	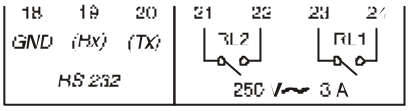

Mod CVM 144 -C2 (Code: 770 570)	
No	Terminal description
13	*No used*
14	*No used*
15	*No used*
16	*No used*
17	*No used*
18	*No used*
19	*No used*
20	*No used*
21	*Relay RL2 output*
22	*Relay RL2 common*
23	*Relay RL1 output*
24	*Relay RL1 common*

Mod CVM 144 RS485-C2 (Code: 770 573)	
No	Terminal description
13	*No used*
14	*No used*
15	*No used*
16	*No used*
17	*No used*
18	*RS-485 (GND)*
19	*RS-485 (-)*
20	*RS-485 (+)*
21	*Relay RL2 output*
22	*Relay RL2 common*
23	*Relay RL1 output*
24	*Relay RL1 common*

Mod CVM 144 RS232-C2 (Code: 770 576)	
No	Terminal description
13	*No used*
14	*No used*
15	*No used*
16	*No used*
17	*No used*
18	*RS-232 (GND)*
19	*RS-232 (Rx)*
20	*RS-232 (Tx)*
21	*Relay RL2 output*
22	*Relay RL2 common*
23	*Relay RL1 output*
24	*Relay RL1 common*

4.3.2.- Card for analog Inputs/Outputs (7 70 571, 7 70574 and 7 70577)

Description	Card connection terminal arrangement
Mod CVM 144 -C2-Analogue (Code: 7 70 571)	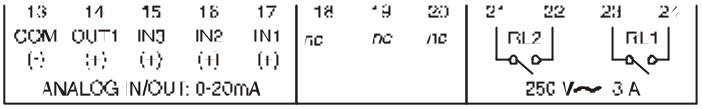
Mod CVM 144 RS485-C2-Analogue (Code: 7 70 574)	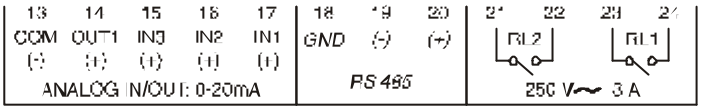
Mod CVM 144 RS232-C2-Analogue (Code: 7 70 577)	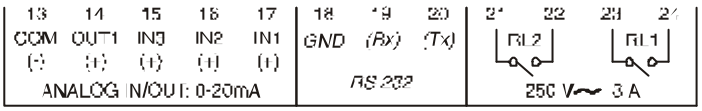

Mod CVM 144 C2-Analogue (Code: 7 70 571)	
Nº	Terminal description
13	*4-20 mA I/O common*
14	*4-20 mA D/A1 output*
15	*4-20 mA A/D3 input*
16	*4-20 mA A/D2 input*
17	*4-20 mA A/D1 input*
18	*No used*
19	*No used*
20	*No used*
21	*Relay RL2 output*
22	*Relay RL2 common*
23	*Relay RL1 output*
24	*Relay RL1 common*

Mod CVM 144 RS485-C2-Analogue (Code: 7 70 574)	
Nº	Terminal description
13	*4-20 mA I/O common*
14	*4-20 mA D/A1 output*
15	*4-20 mA A/D3 input*
16	*4-20 mA A/D2 input*
17	*4-20 mA A/D1 input*
18	*RS-485 (GND)*
19	*RS-485 (-)*
20	*RS-485 (+)*
21	*Relay RL2 output*
22	*Relay RL2 common*
23	*Relay RL1 output*
24	*Relay RL1 common*

Mod CVM 144 RS232-C2-Analogue (Code: 7 70 577)	
Nº	Terminal description
13	*4-20 mA I/O common*
14	*4-20 mA D/A1 output*
15	*4-20 mA A/D3 input*
16	*4-20 mA A/D2 input*
17	*4-20 mA A/D1 input*
18	*RS-232 (GND)*
19	*RS-232 (Rx)*
20	*RS-232 (Tx)*
21	*Relay RL2 output*
22	*Relay RL2 common*
23	*Relay RL1 output*
24	*Relay RL1 common*

4.3.3.- Module for residual and neutral currents (770 572, 770 575 and 770578)

Description	Lable in the expansion module connection terminal
Mod CVM 144 -C2-Currents (Code: 7 70 572)	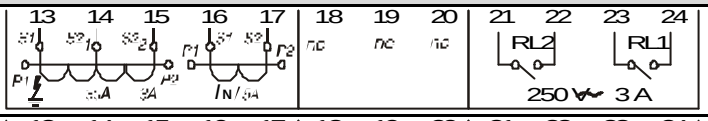
Mod CVM 144 RS485-C2-Currents (Code: 7 70 575)	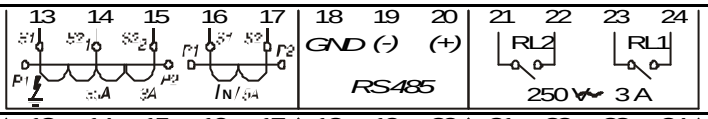
Mod CVM 144 RS232-C2-Currents (Code: 7 70 578)	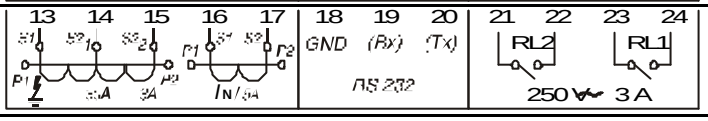

Mod CVM 144 C2-Currents (Code: 7 70 572)	
Nº	Terminal description
13	Measur. residual current S1
14	Measur. residual current S2 (30 A)
15	Measur. residual current S2 (3 A)
16	Measur. neutral current S1
17	Measur. neutral current S2
18	*Not used*
19	*Not used*
20	*Not used*
21	*Relay RL2 output*
22	*Relay RL2 common*
23	*Relay RL1 output*
24	*Relay RL1 common*

Mod CVM 144 RS485-C2-Currents (Code: 7 70 575)	
Nº	Terminal description
13	Measur. residual current S1
14	Measur. residual current S2 (30 A)
15	Measur. residual current S2 (3 A)
16	Measur. neutral current S1
17	Measur. neutral current S2
18	*RS-485 (GND)*
19	*RS-485 (-)*
20	*RS-485 (+)*
21	*Relay RL2 output*
22	*Relay RL2 common*
23	*Relay RL1 output*
24	*Relay RL1 common*

Mod CVM 144 RS232-C2-Currents (Code: 7 70 578)	
Nº	Terminal description
13	Measur. residual current S1
14	Measur. residual current S2 (30 A)
15	Measur. residual current S2 (3 A)
16	Measur. neutral current S1
17	Measur. neutral current S2
18	*RS-232 (GND)*
19	*RS-232 (Rx)*
20	*RS-232 (Tx)*
21	*Relay RL2 output*
22	*Relay RL2 common*
23	*Relay RL1 output*
24	*Relay RL1 common*

Notes:

- For the measurement of the residual current (earth leakage current), the use of transformers of the WG xx series is required. These transformers can be connected to the 3 A or 30 A rated input, depending on the needed measuring range.

- For the measurement of the neutral current, the use of .../5A current transformers is required.

- **Connection diagram of the WG transformer (for residual current purposes)**

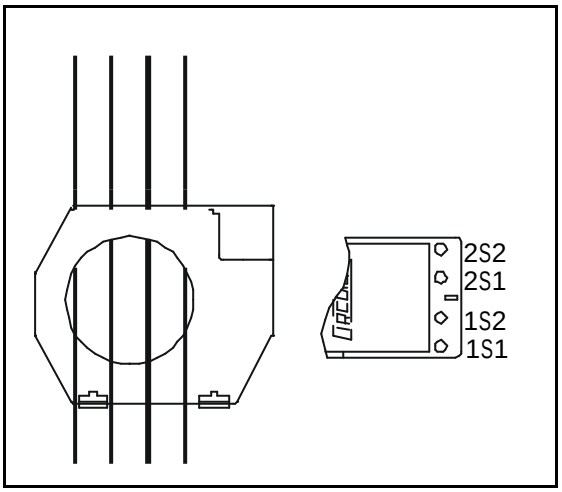

One single WG series transformer can be use for the measurement of residual currents within the range to 3 A or to 30 A, jut depending on the arranged connection diagram.

The current input used for the residual current measurement must agree with the input selected in the pertinent a Setup section (6.5.-)

The appropriate connection mode to execute the measurement of the residual current with the CVM-144 is shown in the below tables:

Measurement of residual current with a maximum value of 3 A (30 mA ... 3 A)			
WG Transformer		**Mod CVM 144 ... -Currents**	
Terminal No.	Description	Terminal No.	Description
1S1	Measuring winding S1	13	Residual current measur. S1
1S2	Measuring winding S2	15	Residual current measur. S2
2S1	Not used		(3 A)
2S2	Not used		

Measurement of residual current with a maximum value of 30 A (300 mA ... 30 A)			
WG Transformer		**Mod CVM 144 ... -Currents**	
Terminal No.	Description	Terminal No.	Description
1S1	Measuring winding S1	13	Residual current measur. S1
1S2	Measuring winding S2	14	Residual current measur. S2

2S1 2S2	Not used Not used		(30 A)

4.3.4.- Card for digital Inputs (7 70 579 and 7 70580)

Description	Card connection terminal arrangement
Mod CVM 144 -C2-Digital (Code: 770 569)	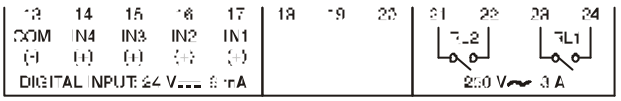
Mod CVM 144 RS485-C2-Digital (Code: 7 70 579)	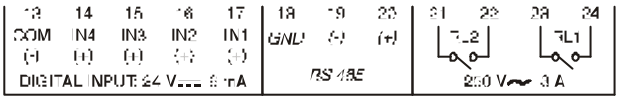
Mod CVM 144 RS232-C2-Digital (Code: 7 70 580)	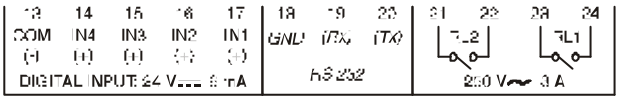

Mod CVM 144 C2-Digital (Code: 7 70 569)	
No	Terminal description

Mod CVM 144 RS485-C2-Digital (Code: 7 70 579)	
No	Terminal description

Mod CVM 144 RS232-C2-Digital (Code: 7 70 580)	
No	Terminal description

13	*digital inputs common*
14	*digital input IN4*
15	*digital input IN3*
16	*digital input IN2*
17	*digital input IN1*
18	*no used*
19	*no used*
20	*no used*
21	*Relay RL2 output*
22	*Relay RL2 common*
23	*Relay RL1 output*
24	*Relay RL1 common*

13	*digital inputs common*
14	*digital input IN4*
15	*digital input IN3*
16	*digital input IN2*
17	*digital input IN1*
18	*RS-485 (GND)*
19	*RS-485 (-)*
20	*RS-485 (+)*
21	*Relay RL2 output*
22	*Relay RL2 common*
23	*Relay RL1 output*
24	*Relay RL1 common*

13	*digital inputs common*
14	*digital input IN4*
15	*digital input IN3*
16	*digital input IN2*
17	*digital input IN1*
18	*RS-232 (GND)*
19	*RS-232 (Rx)*
20	*RS-232 (Tx)*
21	*Relay RL2 output*
22	*Relay RL2 common*
23	*Relay RL1 output*
24	*Relay RL1 common*

4.4.- Connection drawing for the CVM-144 :

a.- Three-phase network.- 4 wires (low voltage) :

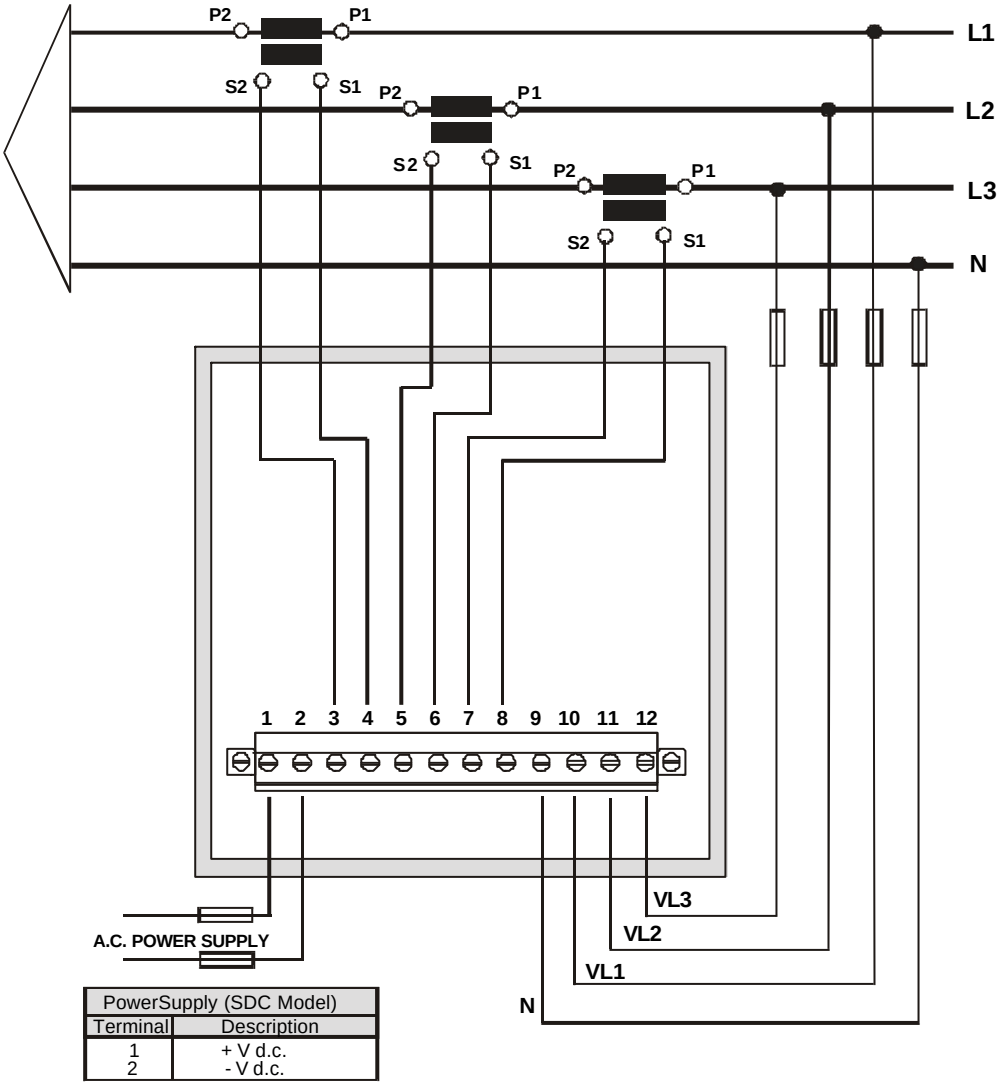

PowerSupply (SDC Model)	
Terminal	Description
1	+ V d.c.
2	- V d.c.

b.-Three-phase network – 3 wires (low voltage):

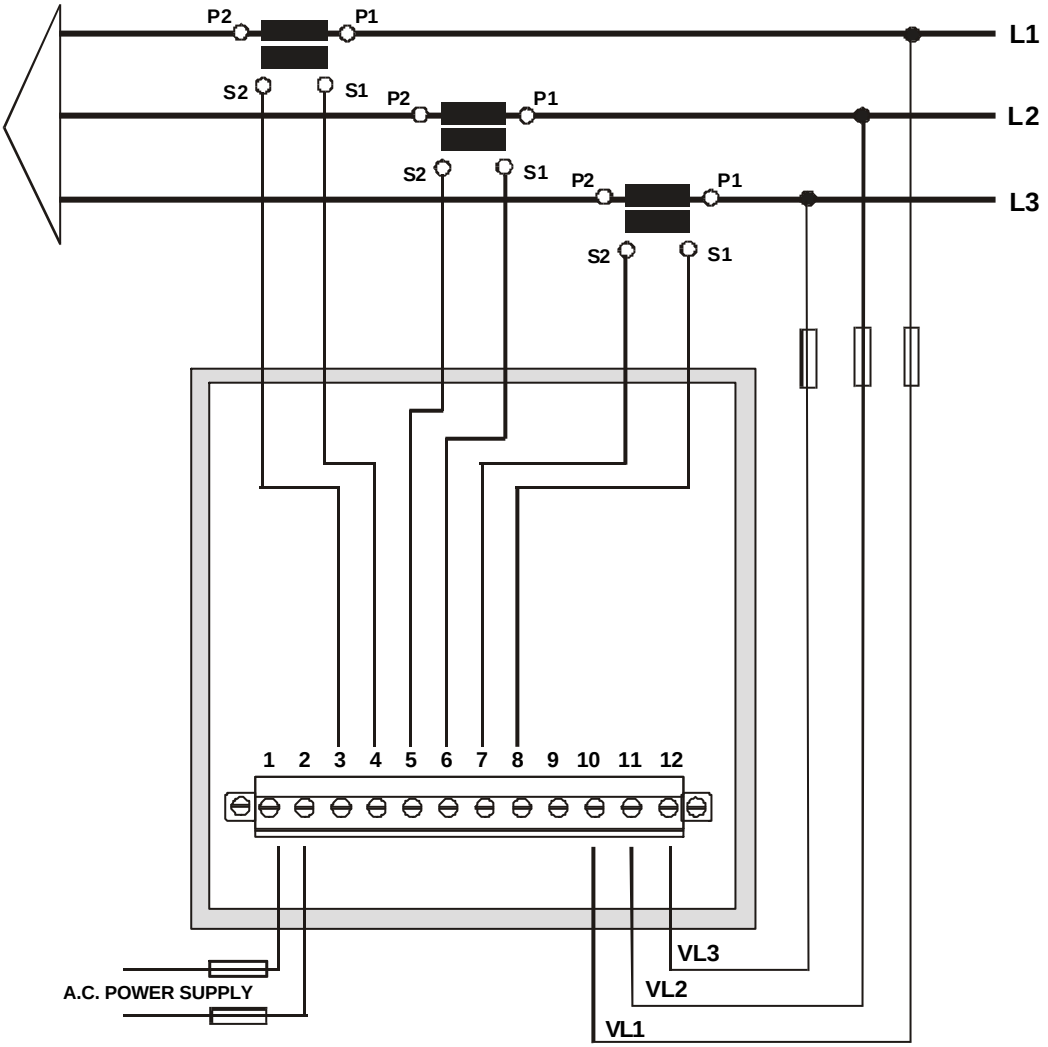

PowerSupply (SDC Model)	
Terminal	Description
1	+ V d.c.
2	- V d.c.

c.- Three-phase network - 3 wires (2 P.T. and 3 C.T.):

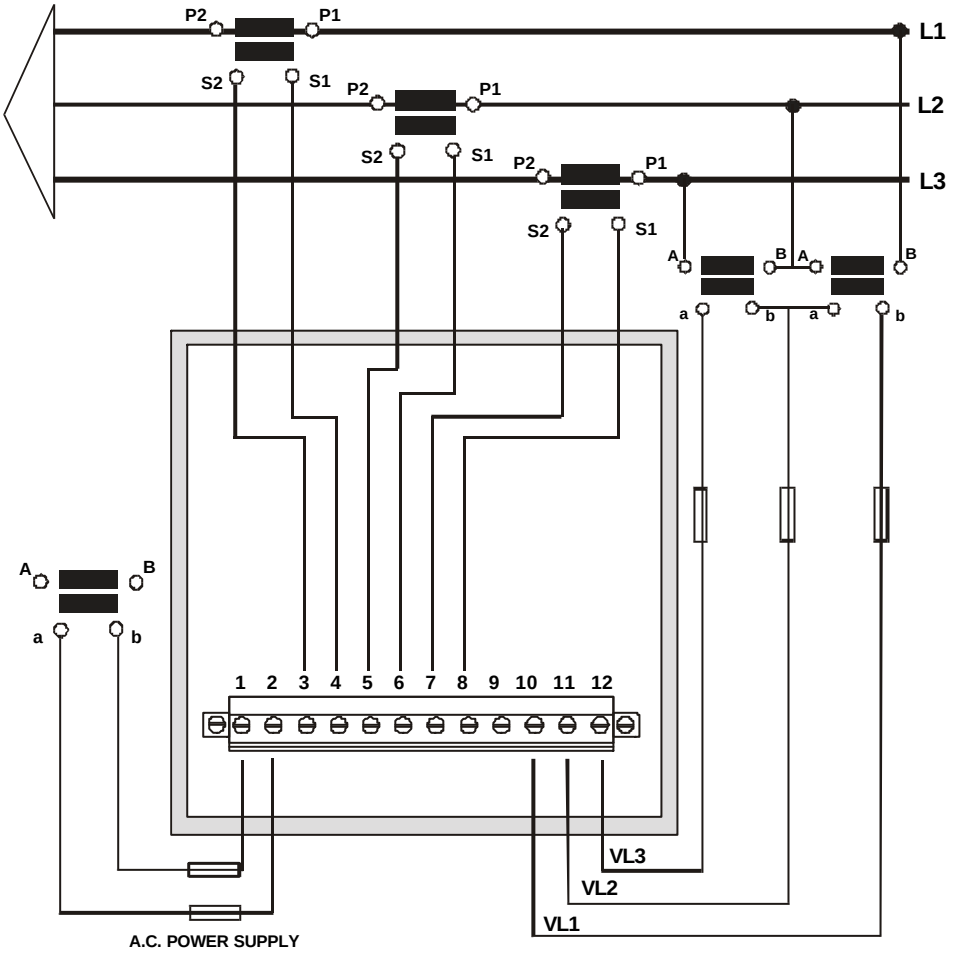

PowerSupply (SDC Model)	
Terminal	Description
1	+ V d.c.
2	- V d.c.

d.- Three-phase network - 3 wires (2 P.T. and 2 C.T.):

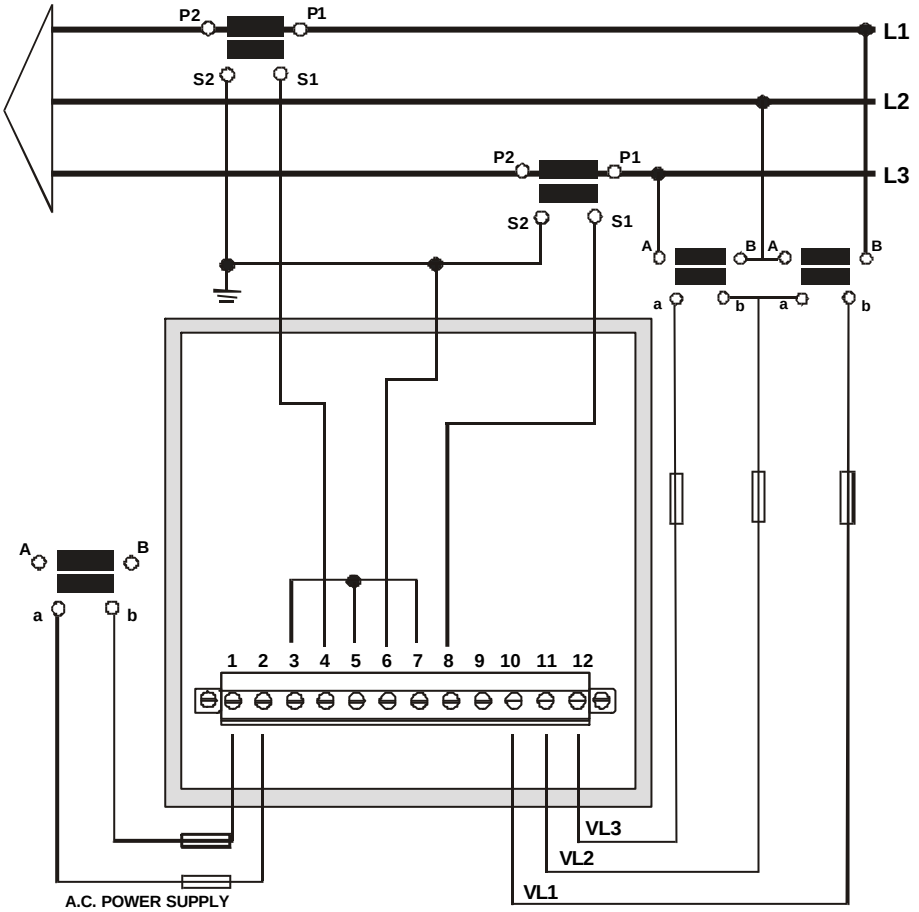

PowerSupply (SDC Model)	
Terminal	Description
1	+ V d.c.
2	- V d.c.

IMPORTANT REMARK! If <u>power = -0.01</u> is shown for any of the phases (codes 03, 09 and 15) and voltage and current are not zero for this phase, check out following points:

- Assure that L1, L2 and L3 phases coincide in voltage and current.

- Correct polarity? Reverse the current transformer placed at this phase.

5.- OPERATION MODE

The instrument has three displays. Each one has also a LED type indicators (red colour). Every led will be on according to the parameter presently shown in screen.

When the CVM-144 is powered on, 2 screens with the indication of the program version and the hardware configuration.

If the message “EEPr Err.” is shown by display, it means that any problem on the hardware configuration has been detected. If this happens, please contact to the technical service.

After some seconds, the analyzer is ready for operation and shows one of the available screens. A led next to the shown parameter is on.

Parameters on display can be switch by pressing the key . Leds on the right or left indicate the parameters shown on screen at any moment.

When the first led (red) is on, it means that VOLTAGE values are shown on screen, that is, the user can read the voltage of the phase L1 (V1), voltage of the phase L2 (V2) and voltage of the phase L3 (V3).

Whether the key " " is press, the next led will be on, so indicating that for this screen CURRENT values of each phase are now shown.

Pressing again the key " " , the next led will be on, and the screen will shown following three parameters, and so successively.

Max **min**

Pressing the "**max**" or "**min**" key, maximum or minimum values for the parameters being shown by display, respectively, appear in screen.

This function is only valid while you keep pressing the "**max**" or "**min**" key. If you stop pressing the key the instantaneous values will appear again after 5 seconds.

While showing maximum or minimum values the LED indicators will keep blinking.

When the harmonic content is viewed by display, keys performs as following described:

– "**max**" : to switch the displayed phase

– "**min**" : to move along the 15th discrete harmonic orders.

Phase	L 1		L 1	Phase
Fundamental	Fund	or	Hn.02	Harmonic order
Value (A)	300		30	Distortion %

reset

Pressing the "**reset**" key the system is reset. This is equivalent to switch off the power supply of the instrument. The maximum and minimum values recorded will be automatically deleted from the internal memory.

If you are in the set-up process and press the "**reset**" key, you exit it without saving any modification that you might have done (this event will depend on the set-up section that is accessed when the reset action is carried out) and reset of the system occurs.

6.- SET-UP PROCEDURE

The set-up procedure of the CVM-144 is performed by means of several SET-UP options.

> ☞ For accessing the **set-up menu** the keys **max** & **min** must be simultaneously pressed once the instrument is at the main screen.

When accessing the **SET-UP,** the message "**SET-UP unlo** " (1) is shown for some seconds on screen, or, otherwise, the message "**SET-UP loc"** (2).

(1) ***Set-up UNLO*** *(SET-UP unlocked) : when the SET-UP is accessed, configuration parameters can be either visualized and modified.*

(2) ***Set-up LOC*** *(SET-UP locked) : when the SET-UP is accessed, configuration parameters can be visualized but cannot be modified .*

Once into the SET-UP, use the keyboard to select different options and enter required variables:

- The key validates de value and pass to the next menu.
- The key **MAX** permits to select among different options in a menu, or to increase a digit when a variable is being entered.
- The key **MIN** permits to move the cursor along the digits.

Different options are following shown in a sequential mode:

1. Choice of visualization of phase-to-neutral or phase-to-phase voltages
2. Voltage displaying format
3. Voltage transformation ratio.
4. Value of the current transformer primary : 1 a 10000 A
5. Value of the current primary value for the measurement of neutral and residual currents.
6. Power demand meter setting
7. Choice of default initial screen
8. Time for display shutdown
9. Deleting energy counters
10. Choice of harmonic distortion determination mode: d% or THD%
11. Alarms setting : RELAY 1 (OUT 1) & RELAY 2 (OUT 2)
12. Analog outputs and inputs setting

6.1.- Phase-to-Phase or Phase-to-Neutral voltages

After the word "**set**" you will see on the three displays the voltages of the phases L1, L2, L3.

U1 U2 U3	or	U12 U23 U31

- Phase to Neutral Voltages: U1, U2, U3
- Phase to Phase Voltages : U12, U23, U31

a) To select one of the voltage options just press the green key "**max**" and both options will appear alternately.

b) When you get in the display the desired option just press the "⇕" key to validate it and access to the next set-up option.

6.2.- Voltage display mode

This option permits the user to select the voltage display mode. That way, the choice between viewing the voltage with one decimal digit or without decimals is user-programmable.

SEt Udec no	or	SEt Udec YES
No decimals		1 decimal digit

c) To select one of the voltage options just press the green key "**max**" and both options will appear alternately.

d) When you get in the display the desired option just press the "⇕" key to validate it and access to the next set-up option.

6.3.- Voltage transformation ratio

6.3.1.- Voltage Transformer Primary

On the screen we read the word "SET U P" followed by 5 digits. They allow us setting the **primary of the voltage transformer**.

```
SET U
P  - -
  - - -
```

a.- To write or modify the value just repeatedly press the "**max**" key and the blinking digit value will be increased.

b.- When the value on screen is the proper one, we can pass to the next digit by pressing the "**min**" key in order to modify the other values.

c.- When the blinking digit is the last one, pressing the "**min**" key we go back to the initial value: set values can be again modified.

d.- Press"⇕" to pass to the next setup option.

Note: Maximum values of transformation ratios which are allowable to be set, depend on the full-scale value of the measuring instrument. **(see indications on the rear side lable**).

FULL-SCALE VALUE	MAXIMUM ALLOWABLE VALUE
110 V~	99,999
300 V~	70,000
500 V~	40,000

- In case that a value higher than the maximum allowable value is validated "⇕", the screen will blink and the previous set value will be kept in memory.

6.3.2.- Voltage Transformer Secondary

We can now set the value of the secondary of the voltage transformer. Only three digits are available:

```
SET U
S
  - - -
```

Same process than in point 6.2.-:

- "**max**" key: Allows us modifying the value of the blinking digit. Each time it is pressed the value is increased.
- "**min**" key: Allows us the validation of the blinking digit and going to the next one.
- Press "⇕" to pass to the next setup option.

If the CVM144 is directly connected to the mains (without voltage transformer) the values of primary and secondary must be the same, for instance 00001/001.

6.4.- Current Transformer Primary

"SET A P" and five digits appear on screen allowing us to set the primary of the current transformer.

```
SET A
P  - -
  - - -
```

☞1 A ... 10.000 A

a) To enter or modify the value of the C.T.'s primary, just repeatedly press "**max**" to increase the value of the blinking digit.

b) When the value in screen is the required, pass to the next digit by pressing "**min**", so that the whole value can be set.

c) When the last digit blinks, pressing then "**min**" the first digit is again accessed, so that set value can be modified if required.

d) To access next set-up option press "⬍".

NOTES:

- The secondary of the current transformers is not programmable. It is automatically set at 5 A (... / 5 A ac)
- The primary current value to be set is also limited by the following condition: The maximum allowable primary current value which can be set is defined by the fact that the multiplication of the primary voltage value by this primary current value cannot exceed 20,000,000.

6.5.- Transformation ratio for the measurement of neutral and residual current

This section is only applicable for the CVM-144 units equipped with the module for residual and neutral current measurement (7 70 572, 7 70 575 & 7 70578)

6.5.1.- Primary of the current transformer for neutral current measur. (I_N)

The screen shows the message "A_n P" and fixe numeric digits that permit the user to set the value of the current transformer for the neutral current measurement.

```
A_n
P  - -
   - - -
```

☞1 A ... 10.000 A

a) To enter or modify the value of the C.T.'s primary, just repeatedly press "**max**" to increase the value of the blinking digit.

b) When the value in screen is the required, pass to the next digit by pressing "**min**", so that the whole value can be set.

c) When the last digit blinks, pressing then "**min**" the first digit is again accessed, so that set value can be modified if required.

d) To access next set-up option press "⬍".

NOTES:

- The secondary of the current transformers is not programmable. It is automatically set at 5 A (... / 5 A a.c.)

6.5.2.- Residual current measuring range: 3 A or 30 A

You will view in screen the message "SET A_L". Set then the right measuring range of the residual current input to which the WG transformer has been connected..

Two possible values are available (the choice must coincide with the measuring transformer wiring): 3 A or 30 A.

```
SEt
A_L
  - - -
```

☞3 A or 30 A

a) To select the appropriate input / range just press the key "**max**", the value will switch from one option to the other one.

b) To pass to the next option press "⇕".

NOTE :

- For the measurement of the residual current (earth leakage current), the use of transformers of the WG xx series is required. These transformers can be connected to the 3 A or 30 A rated input, depending on the needed measuring range.
- For the measurement of the neutral current, the use of .../5A current transformers is required.

6.6.- Setting power demand utility screens.

Push the key "⇕" and the following screens will appear by display:

1.- PARAMETER TO CONTROL ("Pd Code xx")

None		**00**
Three phase active power	kW III	**16**
Three phase apparent power	kVA III	**34**
Average three-phase current	AIII	**36**
Single line current	A1 – A2 – A3	**A-PH**

Value of power integrated during the programmed demand period.

2.- DEMAND PERIOD (**1 to 60 min**.) ("Pd Per xx")

3.- CLEAR MAXIMUM VALUE IN MEMORY

("CLr Pd xx") **no** or **YES**

Programming mode:

- "**max**" key: allows choosing the different available options.
- "**min**" key: allows the validation of the blinking digit and go forward to the next digit (only for the "Pd Per xx" option).
- To pass to the next option press "⇕".

If you don't want to modify anything, just press the "⇕" key three times without modifying any value.

6.7.- Initial screen setting

This option allows choice among **fixed or rotary screen:**

a) **Fixed screen** (choice is switch just pressing): choice the initial screen to be shown when the CVM-144 is powered (or when the CVM-144 is reset).

b) **Rotary screens**: all screens are successively shown at intervals of 5 s.

This option is noticed by means of some leds:

SET
dEF
PAGE

- The key "**max**": permits to modify the selected page. The led of the selected option will be on. Whether rotary screens option is selected, then all leds will be on.

- Press "" to validate the choice.

6.8.- Setting of the display shutdown time

Setting of the period of time to go by, from the moment that the CVM keyboard is not touched anymore, before the CVM display is automatically shut down (low consumption mode):

dISP
OFF
05

→ Time to shutdown (Minutes)

When the display is shut down, a point at the bottom left corner of the CVM will keep blinking. The display will be automatically turned on when any CVM key is pressed.

- "**max**" key: to modify the value of the blinking value.
- "**min**" key: to validate the blinking value and go to the next digit.

6.9.- Clearing energy counters

On display we see "CLR ENER no" (Clear energy counters).

- **"max"**: To select "YES" or "no"
- "⇕": To validate the choice and pass to the following set-up option.

Display:

If any of the energies is programmed (kWh, kvarhL or kvarhC), it is displayed as follows:

⇕	kWh
max	MWh
min	Wh

Example : If the accumulated energy is 32.534,810 kWh, it will be displayed as follows:

3 2	MWh
2 5 3 4	kWh
8 1 0	Wh

⇕	2534 kWh
max	32 MWh
min	810 Wh

Note : the energy counter range is limited at **999.999.999 Wh** , that is**,** when the value of **1 GWh** is reached, the counter is reset to zero.

6.10.- THD or D setting

SET dHAR **d**	or	SET dHAR **Thd**

Two modes for the harmonic distortion calculation can be selected:

a) **d %** : total value of the harmonic distortion referred to the fundamental value.

b) **Thd %** : total value of the harmonic distortion referred to the R.M.S. value.

The selected option will be the one shown on screen.

- To select any option just press "**max**" to switch between the two available options.
- Press "⇕" to validate the choice. Since all set-up options have been completed, the set-up is exited, all modifications are saved in memory, and the running mode automatically starts up.

6.11.- Additional screens when RELAY OUTPUTS (2 relays) are equipped

With these outputs the CVM-144...C2 can be set to deliver:

A.- **Pulse every certain kWh or kvarh (ENERGY).** You can define the value corresponding to the energy consumed for generating a pulse (0.5 s long): kWh / 1 pulse or kvarh / 1 pulse

B.- **ALARM conditions**: the parameter to be controlled, the maximum value, the minimum value and the delay are user-definable for each relay output.

On the CVM-144 screen following messages appear at this SET-UP option:

OUT 1 CODE 00

RELAY 1

☞ Parameter No. (1)

☞ *Depending on the selected variable we will pass to a.- or b.- sections*

☑ In case that no parameter is wanted to be programmed set *par. No. = 00*.

Parameter	**Symbol** phase L1	**Code**	**Symbol** phase L2	**Code**	**Symbol** phase L3	**Code**
Single voltage	V 1	01	V 2	06	V 3	11
Current	A 1	02	A 2	07	A 3	12
Active power	kW 1	03	kW 2	08	kW 3	13
Reactive power Inductive/ Capacitive	kvarL 1 kvarC 1	04	kvarL 2 kvarC 2	09	kvarL 3 kvarC 3	14
Power factor	PF 1	05	PF 2	10	PF 3	15
% THD V	THD V1	25	THD V2	26	THD V3	27
% THD A	THD A1	28	THD A2	29	THD A3	30

Parameter	Symbol	Code	Parameter	Symbol	Code
Three-phase active power	kW III	16	Three-phase cos φ	Cos φ	19
Three-phase inductive power	kvarL III	17	Three-phase power factor	PF III	20
Three-phase capacitive power	kvarC III	18	Frequency	Hz	21
Active energy	kWh	31	Ph-Ph voltage L1- L2	V 12	22
Reactive energy (inductive)	kvarh. L	32	Ph-Ph voltage L2 - L3	V 23	23
Reactive energy (capacitive)	kvarh. C	33	Ph-Ph voltage L3 - L1	V 31	24
Three phase apparent power	kVA III	34			
Power demand	Pd	35	Power demand (L1)	Pd	35*
Three-phase current	AIII	36	Power demand (L2)	Pd	42*
Neutral current	I_N	37	Power demand (L3)	Pd	43*
Analog input 1	Input 1	38			
Analog input 2	Input 2	39			
Analog input 3	Input 3	40			
Residual (earth leakage) current	⚡	41			

* This parameters are only enabled if the maximum demand by line current has been programmed

There are, besides, some parameters that refer to 3 phases at once. In case that any of these parameter is selected, then the alarm will be activated always one phase complies with alarm settings.

Parameter	Symbol	Code
Line-to-neutral voltages	V1 or V2 or V3	90
Currents	I1 or I2 or I3	91
Active powers	kW1 or kW2 or kW3	92
Reactive powers	kvar1 or kvar2 or kvar3	93
Power factors	PF1 or PF2 or PF3	94
Line-to-line voltages	V12 or V23 or V31	95
% THD V	THDV1 or THDV2 or THDV3	96
% THD I	THDI1 or THDI2 or THDI3	97

a.- If an ENERGY parameter is chosen: kWh (31), kvarhL (32) or kvarhC(33)

OUT 1 PULS xxxx	RELAY 1 ☜ kW / pulse (1)

(1) Value of energy in kW : four digits with floating decimal point

<u>Set-up procedure:</u>

- "**max**" key: to modify the value of the blinking value. Every time it is pressed the value is increased.
- "**min**" key: to validate the blinking value and go to the next digit.

NOTE : When the last digit is reached, the position of the decimal can be move point with the "**max**" key.

Example for setting a 500 W / 1 pulse:

*Firstly we enter the value, 0500, and following we place the decimal point at the right position with the "**max**" key ➔ 0.500 kW.*

- For accessing to the next option, press "⇕": set-up options for the second relay will appear.

OUT 2 CODE 00	RELAY 2 ☜ Parameter value (2)

Act as before. Pressing again "⇕" the set-up mode is exited.

b.- ALARM conditions (1 condition for each relay): If any other parameter (excepts for energies) is selected at (1), two outputs can be configured as alarms. For each output it is possible to set:

①	Any of the parameters measured by the CVM-144
②	MAXIMUM value
③	MINIMUM value
④	Delay for the conditions

These screens are successively displayed by the CVM-144 once the parameter has been selected (for the set-up of each option proceed as in the Section a.-):

b.1.- Programming the maximum value to be controlled:

OUT 1 AL hI 0.000	RELAY 1 ☜ Maximum value

The key "**max**" will increase the value of the blinking digit (0,1...9, sign --). Use the key "**min**" to pass to the following digit.

b.2.- Programming the minimum value to be controlled:

OUT 1 AL LO 0.000	RELAY 1 ☜ Minimum value

b.3.- Programming the delay:

OUT 1 SEC 0.000	RELAY 1 Delay in seconds ☜ maximum 9999 s

- Press "⬍" to pass to the next option: the set-up for the second relay is then shown:

OUT 2 CODE 00	RELAY 2 ☜ Parameter No. (1)

Proceed as before. Pressing again "⬍" the set-up option exited.

☑ **ALARM ACTIVATION:** Alarms operation depend on the set values of MAXIMUM and MINIMUM.

MIN +	**MAX +** **max > min**	**ON OFF ON** ¾ ¾ ¾ ½ ¾ ¾ ¾ ½======½ ¾ ¾ ¾ ¾ **0 Min Max**
MIN +	**MAX +** **max < min**	**OFF ON OFF** **====½====½** ¾ ¾ ¾ ¾ ¾ ½**======** **0 Max Min**
MIN --	**MAX +**	**ON OFF ON** ¾ ¾ ¾ ¾ ¾ ½**====½===½** ¾ ¾ ¾ ¾ ¾ **Min 0 Max**
MIN +	**MAX --**	**OFF ON OFF** **=======½** ¾ ¾ ¾ ½ ¾ ¾ ¾ ½**======** **Max 0 Min**
MIN --	**MAX --** **max > min**	**ON OFF ON** ¾ ¾ ¾ ¾ ¾ ½**=====½** ¾ ¾ ¾ ¾ ½ ¾ ¾ ¾ **Min Max 0**
MIN --	**MAX --** **max < min**	**OFF ON OFF** **=====½** ¾ ¾ ¾ ¾ ¾ ½**=====½======** **Max Min 0**

ON = alarm activated ----------> relay closed

OFF = alarm deactivated ------> relay open

☑ The **DELAY** set value is applied either to the connection or the disconnection when the alarm conditions occur.

☑ User-definable units for the different parameters are:

Parameter	**Format**	**Example**
Voltage	V	220.5 = 220.5 V 0220 = 220 V
Current	A	0150 = 150 A
Powers	kW, kvarL, kvarC	0.540 = 540 W 250.5 = 250.5 kW
Energies	kWh, kvarLh, kvarCh	0.500 kWh
Power factor	+/- x.xx	- 0.70
Frequency	xx.x	50.0 = 50 Hz

Output relay connection lay-out ***CVM-144...-C2*** (2 relays) :

Out1	Terminals	Signal
RELAY 1	23 - 24	N.O.

Out2	Terminals	Signal
RELAY 2	21- 22	N.O.

6.12.- Additional screens with 4 - 20 mA outputs y inputs

CVM-144 equipped with an “Analogue” type module provides **4 - 20 mA d.c. or 0 - 20 mA d.c.** inputs and outputs (inputs can also optionally be 0-10 V type).

6.12.1.- Additional screen with the 4 - 20 mA output

These can be programmed to obtain an output signal proportional to any of the parameters measured by the CVM-144, **including the ability of setting the scale (offset and full-scale values).**

On the CVM screen following messages appear at this SET-UP point (provided the right module is connected to the equipment):

a.- Parameter choosing:

dA 1 Code xx	OUTPUT D/A Nr.1 ☜ Parameter No.

- "**max**" -- "**min**" keys: permits the user to choose any parameter measured by the CVM-144 but the parameters referred to energies..
- "**display**" key: validates the selected option and passes to the next setup screen.

b.- Election of 0 - 20 mA or 4 - 20 mA :

dA 1 Scal 4 - 20	OUTPUT D/A Nr.1 Scale : ☜ allows choosing a 0 - 20 mA or 4 - 20 output ("**max**" or "**min**" key)

- "**display**": to validate the selected option and pass to the next setup screen.

c.- <u>Scale offset</u>:

Value of the parameter that we assign as the zero of the scale.

dA 1 Zero x.xxx

OUTPUT D/A Nr.1
zero of the scale:
☜ allows choosing the zero of the scale
(four digits with floating decimal point)

- "**max**" key: it allows modifying the value of the blinking value.
- Every time it is pressed the number is increased.
- "**min**" key: it allows validating the blinking value and go to the next digit.

NOTE : When you arrive at the last digit, you can move the position of the decimal point with the "**max**" key.

- "**display**": to validate the selected option and pass to the next setup screen.

d.- <u>Full scale</u>: Value of the parameter to which we assign the 20 mA.

dA 1 F.ESC x.xxx

OUTPUT D/A Nr.1
Full scale:
☜ allows choosing the full scale (20 mA)
(four digits with floating decimal point)

Proceed as in the previous section.

- For passing to the next option, press "**display**": the setup for the second output will appear (only if this output is available).

dA 2 code xxxx	OUTPUT D/A Nr.2

Proceed as in the previous sections.

1.- <u>Output calculation</u>:

$\text{Re}\,solution = \dfrac{(20 - Zero)}{(F.scale - Offset)}$	*Offset & f. scale* = defined by the user *Zero* = 0 mA or 4 mA
$mA = \text{Re}\,solution * (Mesure - Offset) + Zero$	
mV = mA x ohms	mV $_{(100\ ohms)}$ = mA x 100

- Maximum load is of 500 Ω (10 V - 20 mA)

☞ **Output of the power factor parameter (PF):**

0/4 mA ---------- 20 mA						
+0.00	Ind.	/	1.00	/	Cap.	– 0.00
			ó			
–0.00	Cap.	/	1.00	/	Ind.	+ 0.00

6.12.2.- Additional screens with 4 - 20 mA inputs

The **4-20 mA** analog inputs (which can also be optionally 0-10 V type) can be set to obtain the processed signal either by display or through communications. To complete the analog inputs management, the user must **program the scale values (offset and full-scale value).**

On the CVM screen following messages appear at this SET-UP point (provided the right module is connected to the equipment):

b.- Election of 0 - 20 mA or 4 - 20 mA :

In 1 Scal 4 - 20

INPUT A/D Nr.1
Scale :

☞ allows choosing a 0 - 20 mA or 4 - 20 input ("**max**" or "**min**" key)

* This choice is disable in case of 0-10 V type input card

- "**display**": to validate the selected option and pass to the next setup screen.

c.- <u>Scale offset</u>:

Value of the parameter that we assign as the zero of the scale.

In 1 Zero x.xxx

INPUT A/D Nr.1
zero of the scale:
☜ allows choosing the zero of the scale
(four digits with floating decimal point)

- "**max**" key: it allows modifying the value of the blinking value.
- Every time it is pressed the number is increased.
- "**min**" key: it allows validating the blinking value and go to the next digit.

NOTE : When you arrive at the last digit, you can move the position of the decimal point with the "**max**" key.

- "**display**": to validate the selected option and pass to the next setup screen.

d.- <u>Full scale</u>: Value of the parameter to which we assign the 20 mA.

In 1 F.ESC x.xxx

INPUT A/D Nr.1
Full scale:
☜ allows choosing the full scale (20 mA)
(four digits with floating decimal point)

Proceed as in the previous section.

- For passing to the next option, press "**display**": the setup for the second output will appear (only if this output is available).

Proceed similarly for all analog inputs.

7.- SPECIFICATIONS

Power supply : see specifications on the rear part of the CVM-144

- **CVM-144** : Single-phase 230 V a.c.
  Voltage tolerance: +10 % / -15 %
  Frequency: 50 ... 60 Hz
  Burden ..... 5 VA
- **CVM-144.... SDC** : Direct current 24 V ..... 120 V d.c.
  Voltage tolerence: -20 % / +15 %
  Burden ..... 2.2 W

Operation temperature ..... -10 to 50 ºC
Humidity …… 5 to 95 % R.H. non-condensing

Measuring Circuits :

Rated voltage .... 300 V a.c. Phase-to-Neutral / 520 V a.c. Phase-to-Phase
Frequency ..... 45 to 65 Hz
Rated current ..... In / 5 A **(isolated inputs in the CVM-144-ITF... model)**
Permanent overload .....1.2 In
Current input burden .....0.75 VA

Accuracy :

Voltage ..... 0.5 % of readout ± 2 digits
Current ..... 0.5 % of readout ± 2 digits
Powers ..... 1 % of readout ± 2 digits

Test conditions :
- Errors due to C.T. are not included and direct voltage measurement
- Temperature between + 5 ºC and + 45 ºC
- Power factor between 0.5 and 1
- Measured values between 5 % ... 100 %

Mechanical Characteristics :

- Connection : pluggable connection terminal
- Case material Self-extinguishable, V0 plastic
- Protection Assembled unit (frontal) : IP 55
  Un-assembled unit (side and rear covers) : IP 31
- Dimensions 144 x 144 mm - depth: 84 mm
- Weight 0.400 kg

Relays characteristics: according to model

- Maximum switching load : 750 VA
- Maximum switching voltage : 250 V a.c.
- Maximum switching current : 3 A (Resistive)
- Mechanical endurance : 3×10^7 operations
- Energy / alarms pulses : max. 1 pulse / s

At full load: (250 V a.c. / 3 A)

- Electrical endurance : 1×10^5 operations
- Maximum operation cadence : 450 operations / hour

Analog output features: according to the model

- Output type : 0/4-20 mA
- Resolution : 4096 points (12 bits)
- Maximum impedance: 500 Ω

Analog input features: according to the model

0-20 mA inputs

- Resolution : 4000 points (12 bits)
- Input impedance : 200 Ω

Characteristics of residual currents measuring input: acc. to the model

- Transformer type: WG Series
- Current measuring range: Depending on used input.

Input: 3A → 30 mA - 3 A 30 A → (300 mA – 30 A)

- Resolution: 4000 points (12 bits)

Safety ..... Category III - 300 V a.c. / 520 a.c., as per EN-61010

Protection against electric shock by class II double-isolation

Standards : IEC 664, VDE 0110, UL 94, IEC 801, IEC 348, IEC 571-1, EN 50081-1 EN 50082-1 , EN-61010-1

Dimensions :

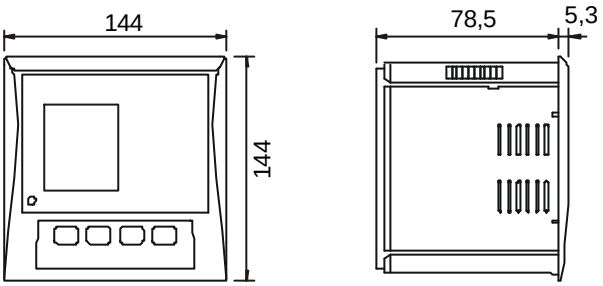

8.- SAFETY CONSIDERATIONS

All installation specification described at the previous chapters named INSTALLATION AND STARTUP, INSTALLATION MODES and SPECIFICATIONS.

Note that with the instrument powered on, the terminals could be dangerous to touching and cover opening actions or elements removal may allow accessing dangerous parts. This instrument is factory-shipped at proper operation condition.

9.- MAINTENANCE

The **CVM-144** does not require any special maintenance. No adjustment, maintenance or repairing action should be done over the instrument open and powered and, should those actions are essential, high-qualified operators must perform them.

Before any adjustment, replacement, maintenance or repairing operation is carried out, the instrument must be disconnected from any power supply source.

When any protection failure is suspected to exist, the instrument must be immediately put our of service. The instrument’s design allow a quick replacement in case of any failure.

10.- TECHNICAL SERVICE

For any inquiry about the instrument performance or whether any failure happens, contact to CIRCUTOR's technical service.

CIRCUTOR S.A. - After-sales service
Vial Sant Jordi, s/n
08232 – Viladecavalls (SPAIN)
Tel - + 34 93 745 29 00
fax - + 34 93 745 29 14
E-mail : central@circutor.es

11.- CVM-144 COMMUNICATIONS

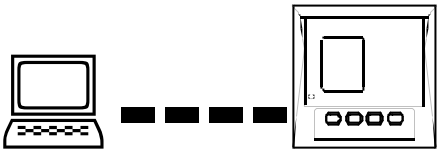

One or some CVM-144... can be connected to a P.C.. With this system we can get all the parameters in one central point of reading. The CVM-144..., has a serial RS-485 or RS-232 type output (according to the model). If we connect more than one device to the same communication line (RS-485), we have to assign to each of them a different code or direction (from 01 to 255), since the P.C. needs the identification of every measuring point.

11.1.- To take into account !:

- **PROTOCOL:** MODBUS © (**Question / Answer)**
- **CVM-144 DEFAULT CONFIGURATION :** 001 / 9.600 / 8 bits / N / 1 bit
- Available baud rates: 1.200 - 2.400 - 4.800 - 9.600 - 19.200 bauds

- RS-485 type output:

-RS-485 connection will be carried out by means of a **twisted and screened cable,** with a minimum of 3 wires, with a maximum distance between the CVM-144 and the last peripheral of 1.200 m. The CVM-144 uses a RS-485 communication bus allowing up to **a maximum of 32 devices in parallel (Multi-point bus) per port used in the PC**.

- RS-232 type output:

-RS-232 connection will be carried out by means of a **twisted and screened cable,** with a minimum of 3 wires, with a maximum distance between the CVM-144 and the P.C. of 15 m.

11.2.- RS-485 type connection to a RS-232 type input of a PC

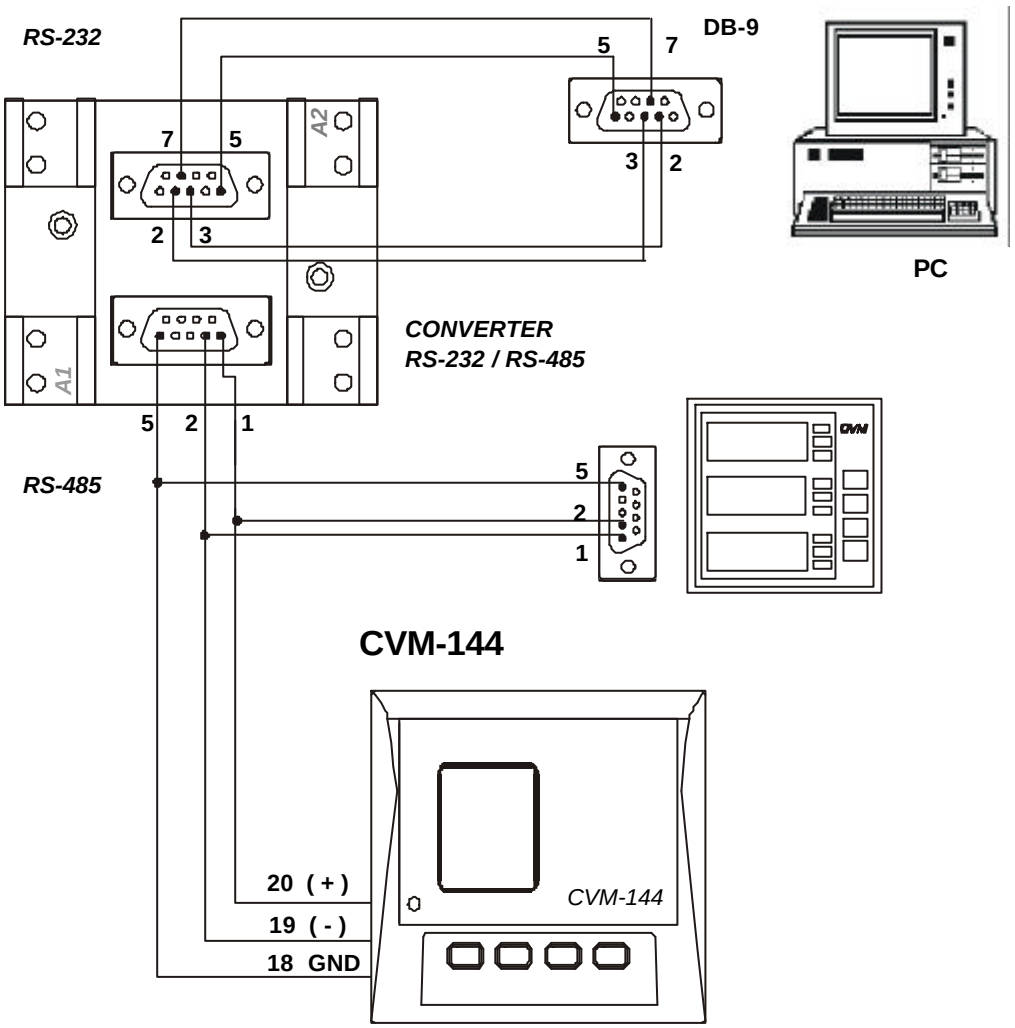

***If the RS485/232 converter with RTS control ability (code 770208) is used, then the pin 7 connection in the 232 side is not necessary to be done.**

11.3.- RS-232 type connection to a RS-232 type input of a PC

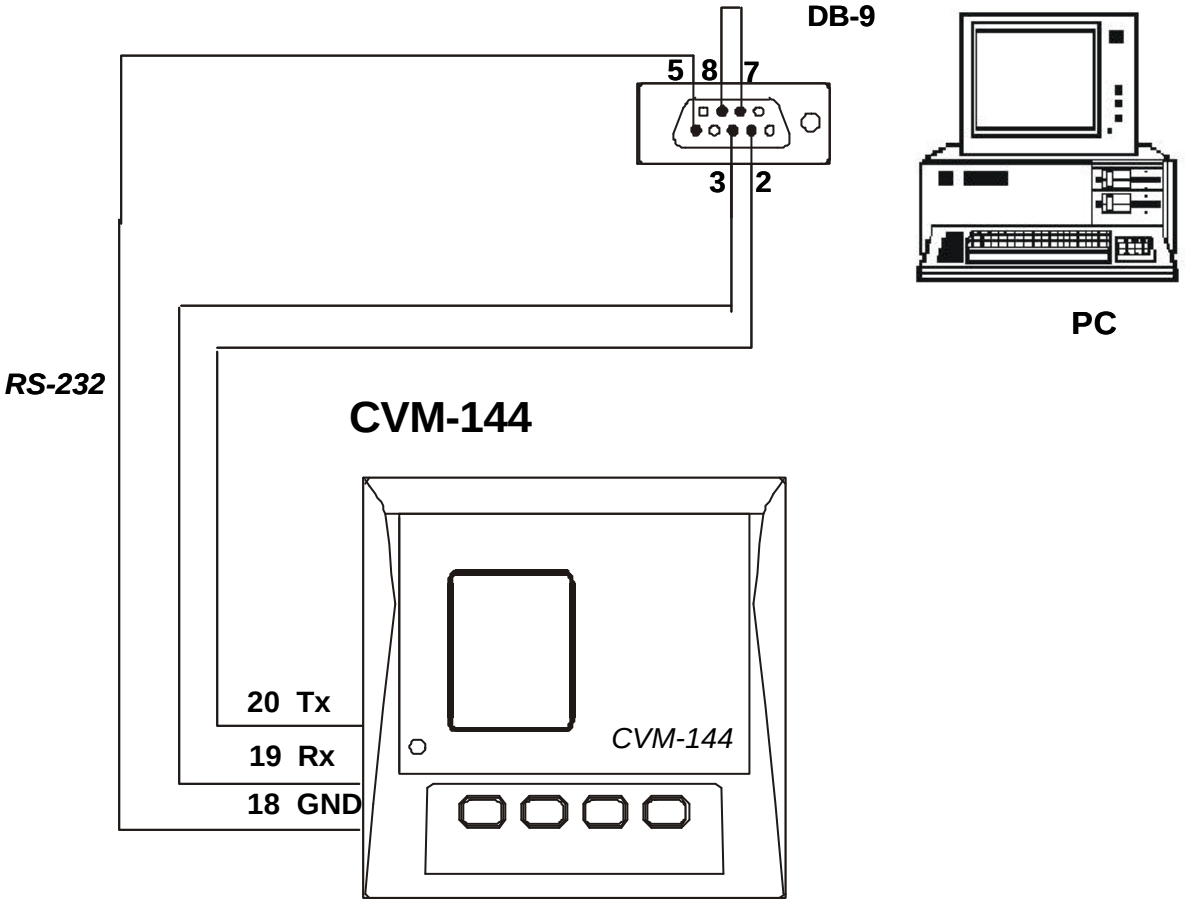

11.4.- MODBUS © protocol

The CVM-144 analyzer can communicate by means of the **MODBUS ©** protocol, as it is following described:

When the CVM-144 communicates with MODBUS protocol, it uses the **RTU mode** (Remote Terminal Unit). Each 8-bits byte in a message contains two 4-bits hexadecimal characters.

The format for each byte in RTU mode is :

* *Code*	:	**8-bits binary,** hexadecimal 0-9, A-F **Two hexadecimal characters** contained in each 8-bits field of the message.
* *Bits per Byte*	:	8 data bits
* *Error Check Field*	:	Cyclical Redundancy Check (**CRC) .**

<u>MODBUS FUNCTIONS</u>:

FUNCTION 01	Reading of relay state
FUNCTION 3 or 4	Reading of n Words (16 bits-2 bytes). This function permits to read all the electrical parameters of the CVM-144. Each parameters is a 32-bits long, hence two words are required to inquiry for a parameter.
FUNCTION 05	Writing one relay

a.- Registers assigned to different parameters measured by the ***CVM-144***:

PARAMETER	Units	MODBUS REGISTERS HEXA-DECIMAL (longs)		
		PRESENT Value	MAXIMUM Value	MINIMUM Value
Phase voltage - V 1	V x 10	00-01	60-61	C0-C1
Current - A 1	mA	02-03	62-63	C2-C3
Active power - kW1	W	04-05	64-65	C4-C5
Reactive power - kvar 1	var	06-07	66-67	C6-C7
Power factor - PF1	PF x 100	08-09	68-69	C8-C9
Phase voltage - V 2	V x 10	0A-0B	6A-6B	CA-CB
Current - A 2	mA	0C-0D	6C-6D	CC-CD
Active power - kW2	W	0E-0F	6E-6F	CE-CF
Reactive power - kvar 2	var	10-11	70-71	D0-D1
Power factor - PF2	PF x 100	12-13	72-73	D2-D3
Phase voltage - V 3	V x 10	14-15	74-75	D4-D5
Current - A 3	mA	16-17	76-77	D6-D7
Active power - kW3	W	18-19	78-79	D8-D9
Reactive power - kvar 3	var	1A-1B	7A-7B	DA-DB
Power factor - PF3	PF x 100	1C-1D	7C-7D	DC-DD
Three-phase active power-kWIII	W	1E-1F	7E-7F	DE-DF
Three-phase inductive power-kvarL III	var	20-21	80-81	E0-E1
Three-phase capacitive power-kvarC III	var	22-23	82-83	E2-E3
Cos φ III	Cos φx100	24-25	84-85	E4-E5
Three-phase power factor - PF III	P.F.x100	26-27	86-87	E6-E7

PARAMETER	Units	MODBUS REGISTERS HEXA-DECIMAL (longs)		
		PRESENT Value	MAXIMUM Value	MINIMUM Value
Frequency (L1) - Hz	Hz x 10	28-29	88-89	E8-E9
Line voltage L1-L2 - V12	V x 10	2A-2B	8A-8B	EA-EB
Line voltage L2-L3 - V23	V x 10	2C-2D	8C-8D	EC-ED
Line voltage L3-L1 - V31	V x 10	2E-2F	8E-8F	EE-EF
%THD V 1	% x 10	30-31	90-91	F0-F1
%THD V 2	% x 10	32-33	92-93	F2-F3
%THD V 3	% x 10	34-35	94-95	F4-F5
%THD I 1	% x 10	36-37	96-97	F6-F7
%THD I 2	% x 10	38-39	98-99	F8-F9
%THD I 3	% x 10	3A-3B	9A-9B	FA-FB
Active energy – kWh	Wh	3C-3D		
Inductive reactive energy - kvarh L	varLh	3E-3F		
Capacitive reactive energy - kvarh C	varCh	40-41		
Three phase apparent power	kVA III	42-43	A2-A3	102-103
Power demand (L1)	Pd	44-45	A4-A5	
Three-phase current	mA	46-47	A6-A7	106-107
Neutral current	mA	48-49	A8-A9	108-109
Analog input 1*	Real value	4A-4B	AA-AB	10A-10B
Analog input 2*	Real value	4C-4D	AC-AD	10C-10D
Analog input 3*	Real value	4E-4F	AE-AF	10E-10F
Residual (earth leakage) current**	mA	50-51	B0-B1	110-111
Power demand (L2) ***	Pd	52-53	B2-B3	
Power demand (L3)***	Pd	54-55	B4-B5	

***** Modbus addresses valid only for the analogue input modules (770574 & 770577)

** Modbus addresses valid only for the ”currents” module (770575 and 770578)

*** This parameters are only enabled if the maximum demand by line current has been programmed

PARAMETER	Units	MODBUS REGISTERS HEXA-DECIMAL (longs)		
		L1	L2	L3
Fundamental	mA	1F4-1F5	212-213	230-231
Harmonic 2	%	1F6-1F7	214-215	232-233
Harmonic 3	%	1F8-1F9	216-217	234-235
Harmonic 4	%	1FA-1FB	218-219	236-237
Harmonic 5	%	1FC-1FD	21A-21B	238-239
Harmonic 6	%	1FE-1FF	21C-21D	23A-23B
Harmonic 7	%	200-201	21E-21F	23C-23D
Harmonic 8	%	202-203	220-221	23E-23F
Harmonic 9	%	204-205	222-223	240-241
Harmonic 10	%	206-207	224-225	242-243
Harmonic 11	%	208-209	226-227	244-245
Harmonic 12	%	20A-20B	228-229	246-247
Harmonic 13	%	20C-20D	22A-22B	248-249
Harmonic 14	%	20E-20F	22C-22D	24A-24B
Harmonic 15	%	210-211	22E-22F	24C-24D

NOTE: The maximum number of parameters (1 parameter = 1 word of 32 bits) that can be read in one transmission is 20.

EXAMPLE

INQUIRY	**0A 04 00 00 00 0A 71 76**
0A	CVM-144 peripheral number, 10 in decimal
04	Reading function
00 00	Initial address (first register)
00 0A	Number of registers to be read
7176	CRC character

ANSWER	**0A 04 14 00 00 08 4D 00 00 23 28 00 00 0F A0 00 00 00 90 00 00 00 60 CB 2E**
0A	CVM-144 number , 10 in decimal
04	Reading function – the one use for the inquiry
14	Bytes received (20)
00 00 08 4D	V 1x10 (register 00 Hex), in decimal 212.5 V
00 00 23 28	mA 1, in decimal 9000 mA
00 00 0F A0	W 1, in decimal 4000 W
00 00 00 90	varL 1, in decimal 144 varL
00 00 00 60	PF 1 x 100, in decimal 96 PF
CB 2E	CRC character

b.- Reading of digital inputs and outputs

Inquiry		Answer
Relay outputs	**Digital inputs**	
PP0100000008 CRC	PP0100100004 CRC	PP0101XXCRC

Where: PP → peripheral No.

XX (hexadecimal byte) → translated to binary

b7	b6	b5	b4	b3	b2	**b1**	**b0**

bit	Relay outputs	Digital inputs (770 579 y 770 580)
bo	relay 1	Digital input 1
b1	relay 2	Digital input 2
b2	No used	Digital input 3
b3	No used	Digital input 4

c.- Write of digital outputs

This function is used to force the status of the CVM-144 digital outputs.

Output No.	Message	Answer
Relay 1	PP050000xx00 CRC	PP050000xx00 CRC
Relay 2	PP050001xx00 CRC	PP050001xx00 CRC

Where: PP → peripheral No.
xx → 00 Deactivate
FF Activate

12.- APPENDIX A: Second SET-UP of the CVM-144

A second SET-UP menu is accessible in order to perform the configuration of the CVM-144 with other features different from factory-supplied ones.

To access this menu proceed as follows:

- Being the CVM-144 powered off, simultaneously press '⬍", "**max**" and "**min**" keys.
- Holding these keys pressed, powered the CVM-144 on.

When this option of the 2nd Setup menu is accessed, the following message will be shown in screen during some seconds

Set UP Inic

12.1.- Communication setting

a.- Communication protocol: MODBUS

SET PROT BUS

Protocol:

☞ MODBUS (c) (BUS) protocol

- "⬍" key: to validate the choice and pass to the next set-up screen:

b.- SETTING COMMUNICATION PARAMETERS

SET
Cdef
NO

Default configuration
☜ "**max**" key to switch from NO / YES

- If YES is chosen: the configuration is **001 / 9600 / 8 bits / N / 1 bit**
- If NO is chosen, pressing "⬍" following options successively appear:

- n PER	:	Peripheral No. 001 to 255
- Baud 1	:	baud rate 1.200 – 2.400 – 4.800 – 9.600 – 19.200
- Parity	:	No, even, odd
- LEN	:	(length) 8 bits
- Stop bits	:	1 or 2

12.2.- SET-UP locking or unlocking

SET
Up
Unlo

☜ **Loc** (locked SET-UP) or **Unloc** (unlocked SET-UP)
Use the key "**max**" to modify the choice.

- Whether **LOC** is set, *when the SET-UP is accessed, configuration parameters can be visualized but cannot be modified*.
- To modify the previously set option, a **4-figure password** is required to be entered (in case that this password is not correct, this blinks and the previous menu is again accessed).

PASSWORD : 1234

To exit this set-up mode, the key RESET can be pressed at any moment (WARNING: if the set-up is exited by pressing the key RESET some last modifications might not be saved in memory) or reach the end of this set-up mode.

13.- APPENDIX B: Insertion of an expansion module into a CVM-144 unit

The installation of an extension card into a CVM-144 unit must be accomplished just following below enumerated steps:

Checking the card acknowledgement

1. Check that the expansion card to be inserted into the CVM-144 will be acknowledged by the power meter.

Code	Expansion module	Board	5.xx	6.xx
7 70 570	Mod. CVM 144 C2			x
7 70 571	Mod. CVM 144 C2 Analogue	0571	x	x
7 70 572	Mod. CVM 144 C2-Currents	0572		x
7 70 569	Mod. CVM 144 C2-Digital			x
7 70 573	Mod. CVM 144 RS485-C2	0573	x	x
7 70 574	Mod. CVM 144 RS485-C2-Analogue	0574	x	x
7 70 575	Mod. CVM 144 RS485-C2-Currents	0575		x
7 70 579	Mod. CVM 144 RS485-C2-Digital	0579	x	x
7 70 576	Mod. CVM 144 RS232-C2	0576	x	x
7 70 577	Mod. CVM 144 RS232-C2 Analogue	0577	x	x
7 70 578	Mod. CVM 144 RS232-C2-Currents	0578		x
7 70 580	Mod. CVM 144 RS232-C2 Digital	0580	x	x

Removing the rear cover

2. Disconnect the meter out from the electric network.
3. Pull the connection terminals out.
4. Insert a plain-edge screwdriver into the bottom gaps (see right picture) and pull up the holding pieces until these are released.
5. Now, the cover should be easily removable with the hand.

Insertion of a new module

6. Place the expansion card into the side rail (The 2nd one from the top) checking that the components keep under the card.

7. Smoothly insert the card, checking that the frontal pins correctly fit into the connector, until the card keeps firmly fixed.

8. Cut the necessary removable pieces out from the rear cover to permit it to be properly hold.

9. Place the CVM-144 rear cover back.

Detection of a new expansion module

10. For versions 6.xx and later ones, the expansion module detection process is automatically performed by the power meter.