SUPPLY NETWORK ANALYZER

CVM-96-SP SERIES

INSTRUCTION MANUAL

(M 981 327 / 00A - GB)

(c) CIRCUTOR S.A.

CVM-96-SP SUPPLY NETWORK ANALYZER - USER'S MANUAL

CONTENTS page

1.- DELIVERY SPOT CHECK 2

2.- MAIN FEATURES 3

3.- INSTALLATION AND START-UP 5
3.1.- Installation. 5
3.2.- CVM-96-SP Connection terninal(RS-485) (see lable on the rear part) 7
3.3.- CVM-96-SP Connection terminal (RS-232) (see lable on the rear part) 8
3.4.- Connection drawing for the CVM-96-SP : 9

4.- OPERATION MODE 10

5.- SET-UP PROCEDURE 11
5.1.- Current Transformer Primary 13
5.2.- Setting power demand utility screens. 14
5.3.- Initial screen setting 15
5.4.- Clearing energy counters 15
5.5.- THD or D setting 17
5.6.- Additional screens when RELAY OUTPUTS (2 relays) are equipped 18

6.- SPECIFICATIONS 24

7.- SAFETY CONSIDERATIONS 26

8.- MAINTENANCE 26

9.- TECHNICAL SERVICE 26

10.- CVM-96-SP COMMUNICATIONS 27
10.1.- ! To take into account: 27
10.2.- RS-485 TYPE CONNECTION TO A RS-232 TYPE INPUT OF A PC 28
RS-232 TYPE CONNECTION TO A RS-232 TYPE INPUT OF A PC 29
10.4.- MODBUS © protocol 30

11.- APPENDIX A: Second SET-UP of the CVM-96-SP 33

1.- DELIVERY SPOT CHECK

This manual is issued to help all the CVM-96-SP users to install and use it in order get the best from it. After receiving the unit, please check the following points:

(a) Does this device correspond to your order specifications?
(b) Check if any damage was done during the shipment process.
(c) Verify that it includes the correct instruction manual.

⚠ The manual you hold in your hands contains information and warnings about the **CVM-96-SP** that the user should respect in order to guarantee a proper operation of all the instrument functions and keep its safety conditions.

Before powering the instrument for the first time, verify following points:

(a) **Power supply: <u>see rear part of your CVM-96-SP</u>**

- ❑ **Standard**: **230 V a.c.** Single-phase, Frequency: 50 ... 60 Hz
- ❑ Other supply voltages, on request.

(b) Maximum measuring voltage:

- ❑ **Standard**: **300 V a.c.**
- ❑ Other models: on request

(c) Maximum measurable current: Current transformer of In / 5 A a.c.

2.- MAIN FEATURES

The CVM-96-SP power meter is a programmable measuring instrument, offering several operation possibilities selectable in its SET-UP option. Before power supplying the instrument, read the **CONNECTIONS and SET-UP** sections and choose the most suitable operation mode for getting your desired data.

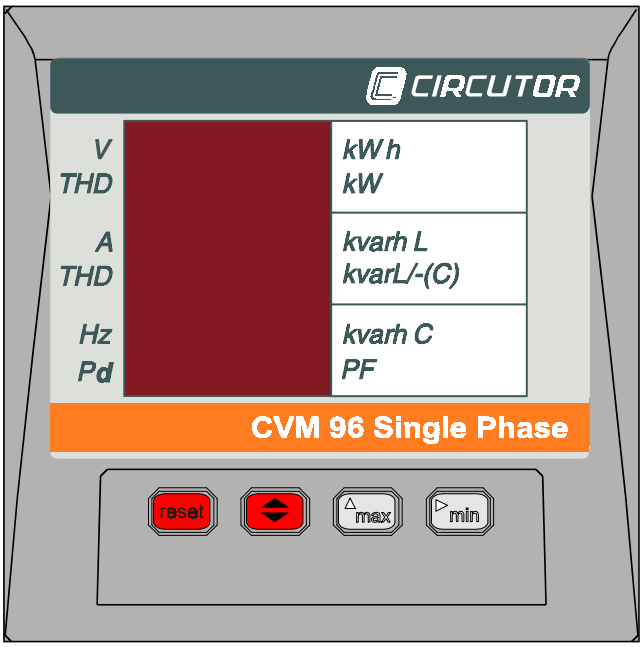

The CVM-96-SP is an instrument which measures, calculates and displays all the main electrical parameters at any electrical network (balanced or not). The measuring is true RMS value, through one a.c. voltage input and one a.c. current inputs (from Current Transformer .../ 5A).

By means of an internal microprocessor it simultaneously measures:

Parameter	*Symbol*
Voltage	*V*
Current	*A*
Active power	*kW*
Reactive power	*kvarL/(-C)*
Voltage THD	*% THD- V*
Current THD	*% THD- A*
Power factor	*PF*
Frequency	*Hz*
Power demand	*Pd*
kW h	*Energy*
kvarhL	*Energy*
kvarhC	*Energy*

The CVM-96-SP delivers the visualization of above listed parameters by means of three 4-digit, led type, displays. Up to 3 parameters can be simultaneously read in the screen. Up to 4 screens are available to visualize all 12 measured parameters.

OTHER FEATURES

- Low-size (96 x 96 mm), panel-mounting analyzer.
- True R.M.S. measuring system.
- Instantaneous, maximum and minimum values of each measured parameter.
- Energy measurement
- RS-485 or RS-232 type communication to a PC (optional)
- Harmonic distortion measurement (THD-V & THD-A).

3.- INSTALLATION AND START-UP

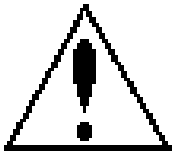

The manual you hold in your hands contains information and warnings that the user should respect in order to guarantee a proper operation of all the instrument functions and keep its safety conditions. The instrument must not be powered and used until its definitive assembly on the cabinet's door.

Whether the instrument is not used as manufacturer's specifications, the protection of the instrument can be damaged.

When any protection failure is suspected to exist (for example, it presents external visible damages), the instrument must be immediately powered off. In this case contact a qualified service representative.

3.1.- Installation.

Before powering the instrument for the first time, verify following points:

a.- **Power supply: <u>see rear part of your CVM-96-SP</u>**

- ❑ ***Standard supply :*** *Single-phase* ***230 V*** *~ (a.c.)*
- ❑ *On request: other voltages*

- *Frequency : 50 - 60 Hz*
- *Supply voltage tolerance : - 15 % / + 10*
- *Connection terminal : Terminals 1 - 2 (Power supply)*
- *Burden : 5 VA*

b.-Maximum voltage at the voltage measuring circuit:

- ❑ **Standard : 300 V a.c. 35 to 65 Hz**
- ❑ *Other models on request :*

c.- Maximum allowable current : Current Transformer of In / 5 A a.c.

d.- Operation conditions :

- Operation temperature range: -10 to +50 ºC
- Humidity : 5 to 95 % R.H. non-condensing

e.- Safety : Designed to meet protection class III- 300 V a.c. as (EN 61010).

Mounting:

Instrument is to be mounted on panel (cut-out $92^{+0.8}$ x $92^{+0.8}$ *mm*, as per DIN 43 700). All connections keep inside the cabinet.

Note that with the instrument powered on, the terminals could be dangerous to touching and cover opening actions or elements removal may allow accessing dangerous parts. Therefore, the instrument must not be used until this is completely installed.

The instrument must be connected to a power supply circuit protected with gl type (IEC 269) or M type fuses rated between 0.5 and 2 A. This circuit should be provided with a circuit breaker or any equivalent element to connect (ON) or disconnect (OFF) the instrument from the power supply network. The supply and measuring voltage circuits will be both connected through a wire with a minimum cross-section of 1 mm^2.

The line of the current transformer secondary will have a minimum cross-section of 2,5 mm^2.

3.2.- CVM-96-SP Connection terninal(RS-485) (see lable on the rear part)

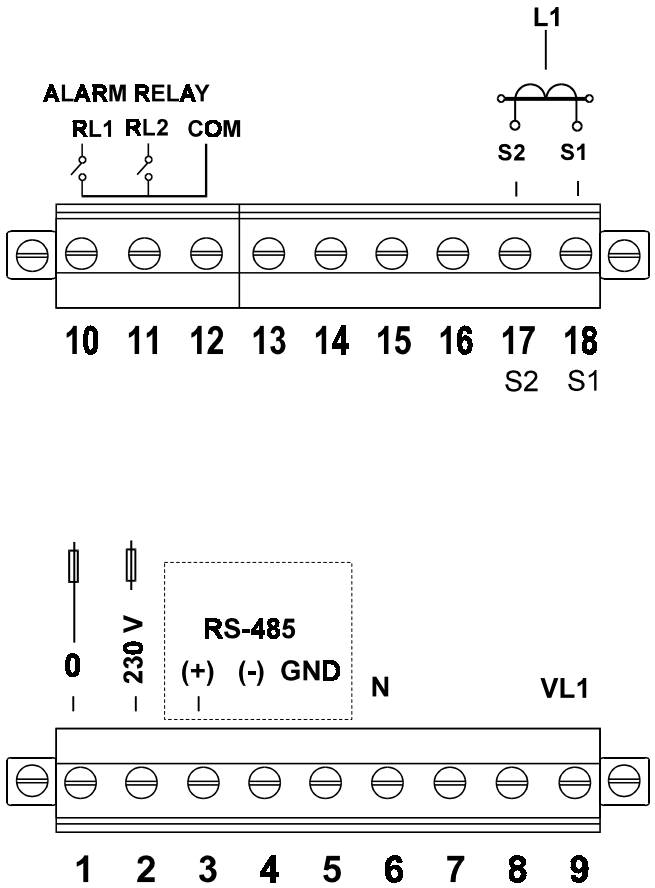

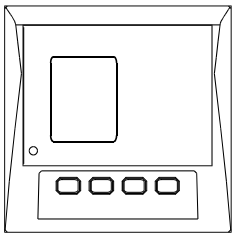

No.	***Terminal description***
	Upper connection terminal
10	*Relay RL1 output*
11	*Relay RL2 output*
12	*Relay common*
13	
14	
15	
16	
17	*Current AL1 - S2 input*
18	*Current AL1 - S2 input*
	Lower connection terminal
1	*Supply voltage input: 0 V*
2	*Supply voltage input: 230 V a.c.*
3	*RS-485 (+)*
4	*RS-485 (-)*
5	*RS-485 (GND)*
6	*Neutral measurement*
7	
8	
9	*VL1 measurement*

NOTE: **... / 5 A current inputs are isolated for the ITF model.**

3.3.- CVM-96-SP Connection terminal (RS-232) (see lable on the rear part)

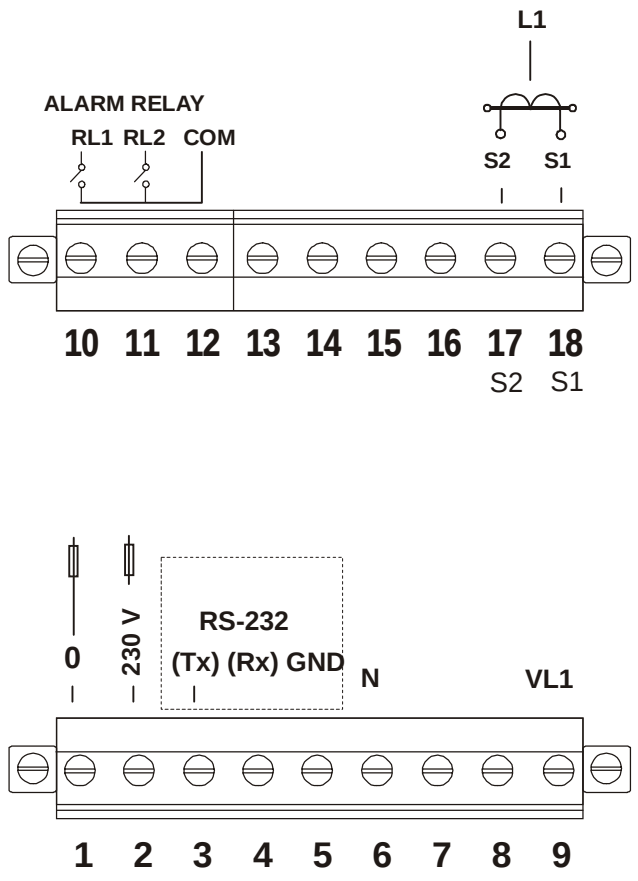

Nº	***Terminal description***
	Upper connection terminal
10	*Relay RL1 output*
11	*Relay RL2 output*
12	*Relay common*
13	
14	
15	
16	
17	*Current AL1-S2 input*
18	*Current AL1-S1 input*
	Lower connection terminal
1	*Supply voltage input 0 V*
2	*Supply voltage input 230V a.c*
3	*RS-232 (Tx)*
4	*RS-232 (Rx)*
5	*RS-232 (GND)*
6	*Neutral measurement*
7	
8	
9	*Measurement VL1*

NOTE: **... / 5 A current inputs are isolated for the ITF model.**

3.4.- Connection drawing for the CVM-96-SP :

a.- Single phase network :

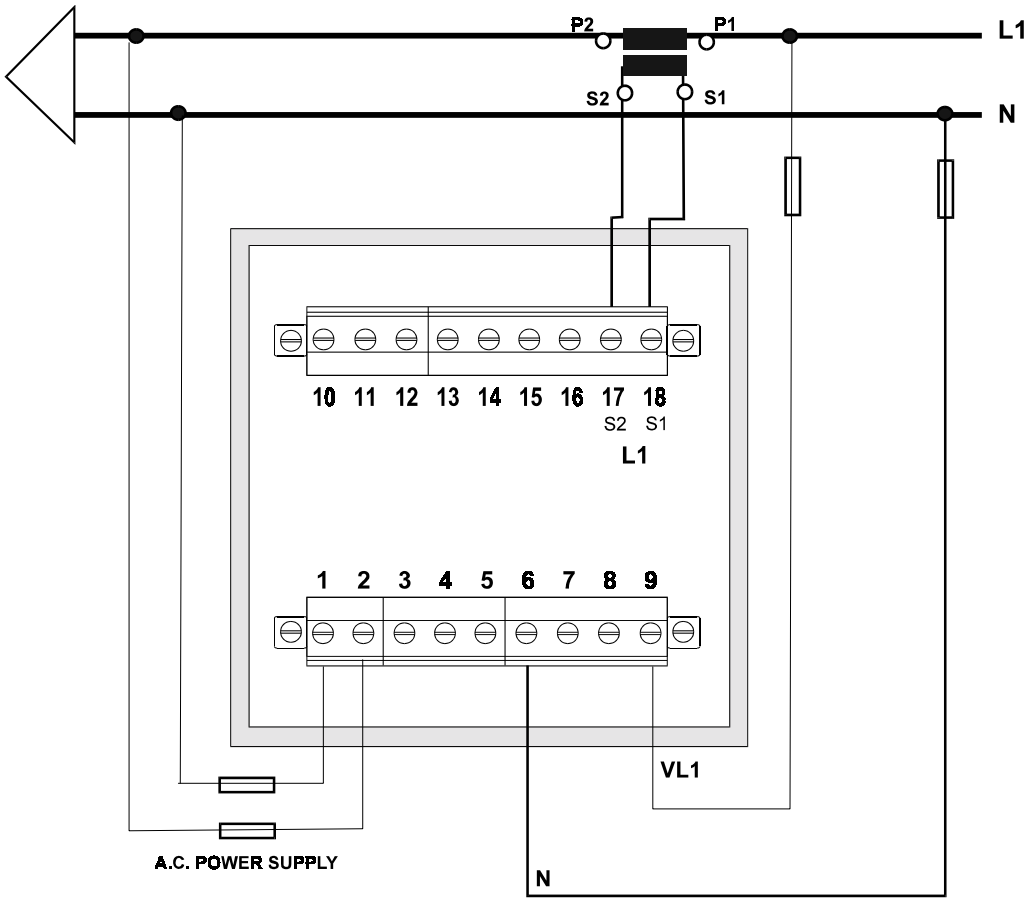

IMPORTANT REMARK! If <u>power = -0.01</u> is shown and voltage and current are not zero for this phase, check out following points:

- Correct polarity? Reverse the current transformer placed at this phase.

4.- OPERATION MODE

The instrument has three displays. Each one has also a LED type indicators (red colour). Every led will be on according to the parameter presently shown in screen.

When the CVM-96-SP is powered up, the display shows " **xxxx** ", so informing about the program version and the set-up. After some seconds, the analyzer is ready for operation and shows one of the available screens. A led next to the shown parameter is on.

Parameters on display can be switch by pressing the key . Leds on the right or left indicate the parameters shown on screen at any moment.

Max **min**

Pressing the "**max**" or "**min**" key, maximum or minimum values for the parameters being shown by display, respectively, appear in screen.

This function is only valid while you keep pressing the "**max**" or "**min**" key. If you stop pressing the key the instantaneous values will appear again after 5 seconds.

While showing maximum or minimum values the LED indicators will keep blinking.

Reset

Pressing the "**reset**" key the system is reset. This is equivalent to switch off the power supply of the instrument. The maximum and minimum values recorded will be automatically deleted from the internal memory.

If you are in the set-up process and press the "**reset**" key, you exit it without saving any modification that you might have done (this event will depend on the set-up section that is accessed when the reset action is carried out) and reset of the system occurs.

5.- SET-UP PROCEDURE

The set-up procedure of the CVM-96-SP is performed by means of several SET-UP options.

☞ For accessing the **set-up menu** the keys **max** & **min** must be simultaneously pressed once the instrument is at the main screen.

When accessing the **SET-UP,** the message "**SET-UP unloc** " (1) is shown for some seconds on screen, or, otherwise, the message "**SET-UP loc"** (2).

*(1) **Set-up UNLOC** (SET-UP unlocked) : when the SET-UP is accessed, configuration parameters can be either visualized and modified.*
*(2) **Set-up LOC** (SET-UP locked) : when the SET-UP is accessed, configuration parameters can be visualized but cannot be modified .*

Once into the SET-UP, use the keyboard to select different options and enter required variables:

- The key validates de value and pass to the next menu.
- The key **MAX** permits to select among different options in a menu, or to increase a digit when a variable is being entered.
- The key **MIN** permits to move the cursor along the digits.

Different options are following shown in a sequential mode:

1.- Value of the current transformer primary : 1 a 10000 A
2.- Power demand set-up (parameter, period and clear)
3.- Choice of default initial screen
4.- Deleting energy counters
5.- Choice of harmonic distortion determination mode: d% or THD%
6.- Setting alarms : RELAY 1 (OUT 1) & RELAY 2 (OUT 2)

5.1.- Current Transformer Primary

"SET A P" and five digits appear on screen allowing us to set the primary of the current transformer.

```
SET A
P   - -
  - - -
```

a.- To enter or modify the value of the C.T.'s primary, just repeatedly press "**max**" to increase the value of the blinking digit.

b.- When the value in screen is the required, pass to the next digit by pressing "**min**", so that the whole value can be set.

c.- When the last digit blinks, pressing then "**min**" the first digit is again accessed, so that set value can be modified if required.

d.- To access next set-up option press "⇕".

NOTES:
- The maximum programmable value is 10.000
- The secondary of the current transformers is not programmable. It is automatically set at 5 A (... / 5 A ac)

5.2.- Setting power demand utility screens.

Push the key "⬍" and the following screens will appear by display:

1.- PARAMETER TO CONTROL ("Pd Code xx")

None		**00**
Active power	kW	**03**
Apparent power	kVA	**13**

Value of power integrated during the programmed demand period.

2.- DEMAND PERIOD (**1 to 60 min**.) ("Pd Per xx")
3.- CLEAR MAXIMUM VALUE IN MEMORY
("CLr Pd xx") **no** or **YES**

PROGRAMMING MODE:

- "**max**" key: allows choosing the different available options.
- "**min**" key: allows the validation of the blinking digit and go forward to the next digit (only for the "Pd Per xx" option).
- To pass to the next option press "⬍".

If you don't want to modify anything, just press the "⬍" key three times without modifying any value.

5.3.- Initial screen setting

This option allows choice among **fixed or rotary screen:**

a.- **Fixed screen** (choice is switch just pressing): choice among 4 available screen of the initial screen to be shown when the CVM-96-SP is powered (or when the CVM-96-SP is reset).

b.- **Rotary screens**: all 4 screens are successively shown at intervals of 5 s.

This option is noticed by means of some leds:

SET
DEF
PAGE

- The key "**max**": permits to modify the selected page. The led of the selected option will be on. Whether rotary screens option is selected, then all leds will be on.

- Press "" to validate the choice.

5.4.- Clearing energy counters

On display we see "CLR ENER no" (Clear energy counters).

- **"max"**: To select "YES" or "no"
- "": To validate the choice and pass to the following set-up option.

- **Display**: If any of the energies is programmed (kWh, kvarhL or kvarhC), it is displayed as follows:

⬍	kWh
Max	MWh
Min	Wh

Example : If the accumulated energy is 32.534,810 kWh, it will be displayed as follows:

3 2			MWh
	2 5 3 4		kWh
		8 1 0	Wh

⬍	2534	kWh
max	32	MWh
min	810	Wh

<u>Note</u> : the energy counter range is limited at **999.999.999 Wh** , that is**,** when the value of **1 GWh** is reached, the counter is reset to zero.

5.5.- THD or D setting

SET DHAR **d**	or	SET dHAR **Thd**

Two modes for the harmonic distortion calculation can be selected:

- **d %** : total value of the harmonic distortion referred to the fundamental value.
- **Thd %** : total value of the harmonic distortion referred to the R.M.S. value.

The selected option will be the one shown on screen.

a.- To select any option just press "**max**" to switch between the two available options.

b.- Press "⇕" to validate the choice. Since all set-up options have been completed, the set-up is exited, all modifications are saved in memory, and the running mode automatically starts up.

5.6.- Additional screens when RELAY OUTPUTS (2 relays) are equipped

With these outputs the CVM-96-SP...C2 can be set to deliver:

A.- **Pulse every certain kWh or kvarh (ENERGY).** You can define the value corresponding to the energy consumed for generating a pulse (0.5 s long): kWh / 1 pulse or kvarh / 1 pulse

B.- **ALARM conditions**: the parameter to be controlled, the maximum value, the minimum value and the delay are user-definable for each relay output.

On the CVM-96-SP screen following messages appear at this SET-UP option:

OUT 1	RELAY 1
CODE	
00	☞ Parameter No. (1)

☞ *Depending on the selected variable we will pass to a.- or b.- sections*

☑ In case that no parameter is wanted to be programmed set *par. No. = 00*.

Parameter	Symbol	Code
Voltage	V	01
Current	A	02
Active power	kW	03
Reactive power Inductive/ Capacitive	kvarL kvarC	04
Power factor	PF	05
Cos φ	Cos φ	06
Frequency	Hz	07

Parameter	Symbol	Code
% THD V	THD V	08
% THD A	THD A	09
Active energy	KW.h	10
Reactive energy (inductive)	Kvarh. L	11
Reactive energy (capacitive)	Kvarh. C	12
Apparent power	KWA	13
Power demand	Md (Pd)	14

a.- If an ENERGY parameter is chosen: kW.h, kvarh.L or kvarh.C

OUT 1		RELAY 1
PULS		
xxxx	☜	kW / pulse (1)

(1) Value of energy in kW : four digits with floating decimal point

- <u>Set-up procedure:</u>

- "**max**" key: to modify the value of the blinking value.
  Every time it is pressed the value is increased.

- "**min**" key: to validate the blinking value and go to the next digit.

NOTE : When the last digit is reached, the position of the decimal can be move point with the "**max**" key.

Example for setting a 500 W / 1 pulse:

*Firstly we enter the value, 0500, and following we place the decimal point at the right position with the "**max**" key ➔ 0.500 kW.*

- For accessing to the next option, press "⬍": set-up options for the second relay will appear (only with CVM-96-SP...-C2).

OUT 2	RELAY 2
CODE	
00	☜ Parameter value (2)

Act as before. Pressing again "⬍" the set-up mode is exited.

b.- ALARM conditions (1 condition for each relay): If any other parameter is selected at (1), two outputs can be configured as alarms. For each output it is possible to set:

①	Any of the parameters measured by the CVM-96-SP
②	MAXIMUM value
③	MINIMUM value
④	Delay for the conditions

These screens are successively displayed by the CVM-96-SP once the parameter has been selected (for the set-up of each option proceed as in the Section a.-):

b.1.- Programming the maximum value to be controlled:

OUT 1	RELAY 1
AL hI	
0.000	☜ Maximum value

The key "**max**" will increase the value of the blinking digit (0,1...9, sign --). Use the key "**min**" to pass to the following digit.

b.2.- Programming the minimum value to be controlled:

OUT 1	RELAY 1
AL LO	
0.000 ☜	Minimum value

b.3.- Programming the delay:

OUT 1	RELAY 1
SEC	Delay in seconds
0.000 ☜	maximum 9999 s

THD parameters can also be selected as alarm conditions.

- Press "⬍" to pass to the next option: the set-up for the second relay is then shown:

OUT 2	RELAY 2
CODE	
00 ☜	Parameter No. (1)

Proceed as before. Pressing again "⬍" the set-up option exited.

☑ **ALARM ACTIVATION:** Alarms operation depend on the set values of MAXIMUM and MINIMUM.

MIN +	**MAX +** **max > min**	**ON OFF ON** ——————|——————|======|———————— **0 Min Max**
MIN +	**MAX +** **max < min**	**OFF ON OFF** **====**|**====**|————————|====== **0 Max Min**
MIN --	**MAX +**	**ON OFF ON** ————————|====|**===**|———————— **Min 0 Max**
MIN +	**MAX --**	**OFF ON OFF** =======|——————|——————|====== **Max 0 Min**
MIN --	**MAX --** **max > min**	**ON OFF ON** ————————|=====|————————|—————— **Min Max 0**
MIN --	**MAX --** **max < min**	**OFF ON OFF** =====|————————|=====|**======** **Max Min 0**

ON = alarm activated ----------> relay closed
OFF = alarm deactivated ------> relay open

☑ The **DELAY** set value is applied either to the connection or the disconnection when the alarm conditions occur.

☑ User-definable units for the different parameters are:

Parameter	Format	Example
Voltage	With decimals = V (xxxx) Without decimals = kV (xxx.x)	0220 = 220 V 220.5 = 220.5 V
Current	A	0150 = 150 A
Powers	kW, kvarL, kvarC	0.540 = 540 W 250.5 = 250.5 kW
Energies	kWh, kvarLh, kvarCh	
Power factor	+/- x.xx	- 0.70
Frequency	xx.x	50.0 = 50 Hz

<u>Output relay connection lay-out</u> ***CVM-96-SP...-C2*** (2 relays) :

Out1	Terminals	Signal
RELAY 1	10 - 12	N.O.

Out2	Terminals	Signal
RELAY 2	11- 12	N.O.

6.- SPECIFICATIONS

Power supply : see specifications on the rear part of the CVM-96-SP
- **CVM-96-SP** : Single-phase 230 V a.c.
Voltage tolerance: +10 % / -15 %
Frequency: 50 ... 60 Hz

Burden ..... 5 VA
Operation temperature ..... –10 to 50 ºC

Measuring Circuits :
Rated voltage .... 300 V a.c.
Frequency ..... 45 to 65 Hz
Rated current ..... In / 5 A **(isolated inputs in the CVM-96-SP-ITF... model)**
Permanent overload .....1.2 In
Current input burden .....0.75 VA

Accuracy :
Voltage ..... 0.5 % of readout ± 1 digits
Current ..... 0.5 % of readout ± 1 digits
Powers ..... 1.0 % of readout ± 1 digits

Test conditions :
- Errors due to C.T. are not included and direct voltage measurement
- Temperature between + 5 ºC and + 45 ºC
- Power factor between 0.5 and 1
- Measured values between 5 % ... 100 %

Mechanical Characteristics :
- Connection : pluggable connection terminal
- Case material Self-extinguishable, V0 plastic
- Protection Assembled unit (frontal) : IP 54
Un-assembled unit (side and rear covers) : IP 31
- Dimensions 96 x 96 mm - depth: 100 mm
- Weight 0.520 kg

Relays characteristics: according to model

- Maximum switching load : 2500 VA
- Maximum switching voltage : 400 V a.c.
- Maximum switching current : 10 A

- Mechanical endurance : 3×10^7 operations
- Energy / alarms pulses : max. 1 pulse / s

At full load: (250 V a.c. / 10 A)

- Electrical endurance : 1×10^5 operations
- Maximum operation cadence : 450 oper. / hour

- Safety ..... Category III - 300 V a.c. / 520 a.c., as per EN-61010
- Protection against electric shock by class II double-isolation

Standards : IEC 664, VDE 0110, UL 94 , IEC 801 , IEC 348 , IEC 571-1
EN 50081-1, EN 50082-1 , EN-61010-1

Dimensions :

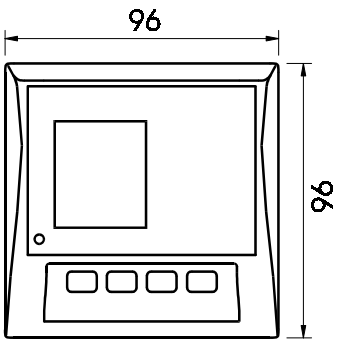

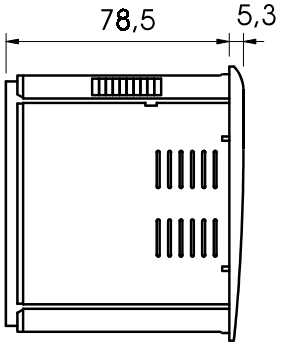

7.- SAFETY CONSIDERATIONS

All installation specification described at the previous chapters named INSTALLATION AND STARTUP, INSTALLATION MODES and SPECIFICATIONS.

Note that with the instrument powered on, the terminals could be dangerous to touching and cover opening actions or elements removal may allow accessing dangerous parts. This instrument is factory-shipped at proper operation condition.

8.- MAINTENANCE

The CVM-96-SP does not require any special maintenance. No adjustment, maintenance or repairing action should be done over the instrument open and powered and, should those actions are essential, high-qualified operators must perform them.

Before any adjustment, replacement, maintenance or repairing operation is carried out, the instrument must be disconnected from any power supply source.

When any protection failure is suspected to exist, the instrument must be immediately put our of service. The instrument's design allow a quick replacement in case of any failure.

9.- TECHNICAL SERVICE

For any inquiry about the instrument performance or whether any failure happens, contact to CIRCUTOR's technical service.

CIRCUTOR S.A. - After-sales service
c / Lepanto , 49
08223 - TERRASSA
Tel - + 34 93 745 29 00
fax - + 34 93 745 29 14
E-mail : central@circutor.es

10.- CVM-96-SP COMMUNICATIONS

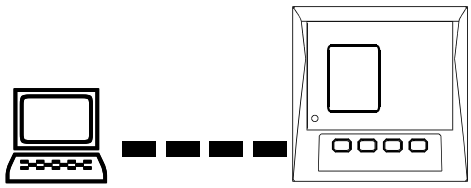

One or some CVM-96-SP... can be connected to a P.C.. With this system we can get all the parameters in one central point of reading. The CVM-96-SP..., has a serial RS-485 or RS-232 type output (according to the model). If we connect more than one device to the same communication line (RS-485), we have to assign to each of them a different code or direction (from 01 to 99), since the P.C. needs the identification of every measuring point.

10.1.- ! To take into account:

- PROTOCOL: MODBUS © (**Question / Answer)**

- CVM-96-SP DEFAULT CONFIGURATION : 001 / 9.600 / 8 bits / N / 1 bit

- Available baud rates: 1.200 - 2.400 - 4.800 - 9.600 - 19.200 bauds

- RS-485 type output:
-RS-485 connection will be carried out by means of a **twisted and screened cable,** with a minimum of 3 wires, with a maximum distance between the CVM-96-SP and the last peripheral of 1.200 m. The CVM-96-SP uses a RS-485 communication bus allowing up to **a maximum of 32 devices in parallel (Multi-point bus) per port used in the PC**.

- **RS-232 type output:**
  -RS-232 connection will be carried out by means of a **twisted and screened cable,** with a minimum of 3 wires, with a maximum distance between the CVM-96-SP and the P.C. of 15 m.

10.2.- RS-485 TYPE CONNECTION TO A RS-232 TYPE INPUT OF A PC

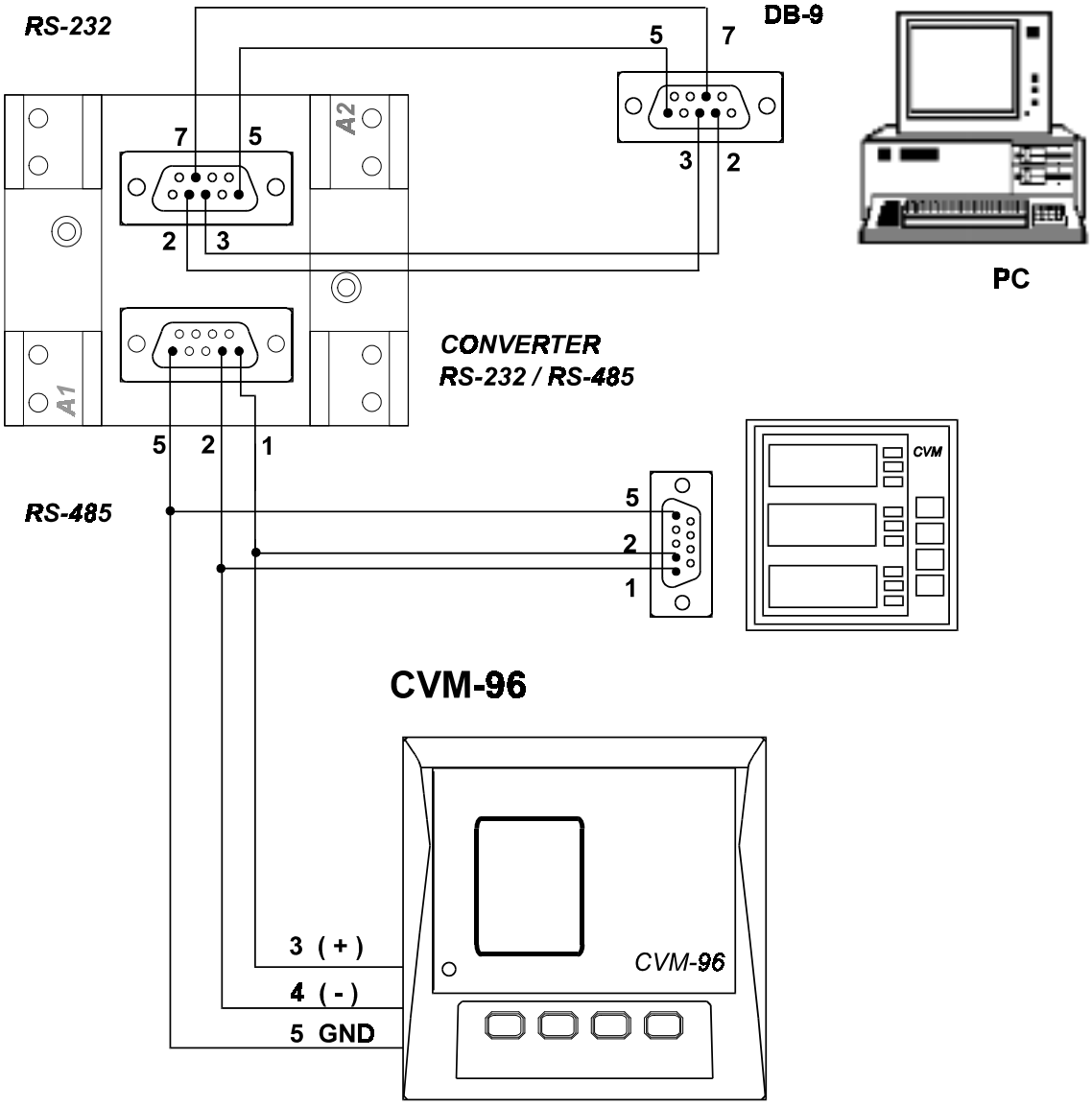

10.3.- RS-232 TYPE CONNECTION TO A RS-232 TYPE INPUT OF A PC

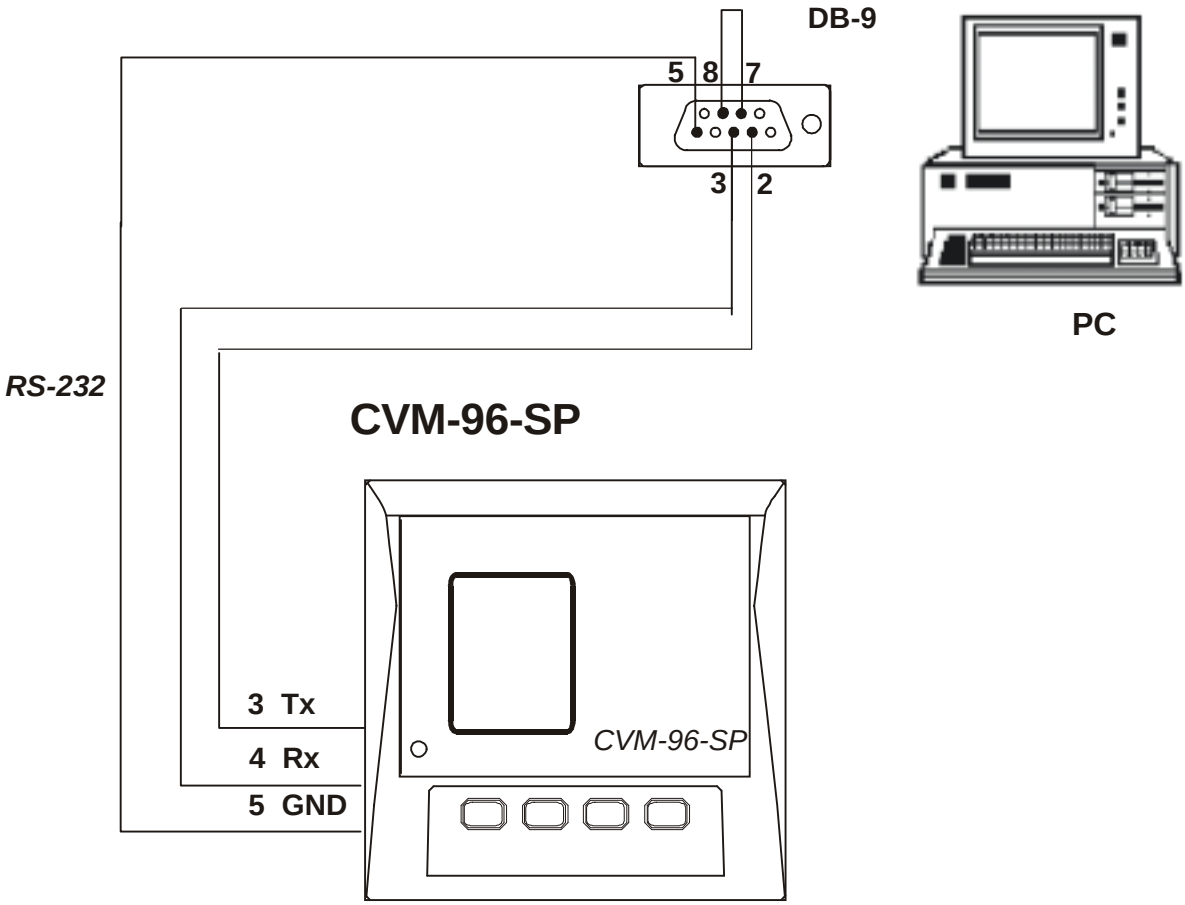

10.4.- MODBUS © protocol

The CVM-96-SP analyzer can communicate by means of the **MODBUS ©** protocol, as it is following described:

When the CVM-96-SP communicates with MODBUS protocol, it uses the **RTU mode** (Remote Terminal Unit). Each 8-bits byte in a message contains two 4-bits hexadecimal characters.

The format for each byte in RTU mode is :

* *Code*	:	**8-bits binary,** hexadecimal 0-9, A-F **Two hexadecimal characters** contained in each 8-bits field of the message.
* *Bits per Byte*	:	8 data bits
* *Error Check Field*	:	Cyclical Redundancy Check (**CRC) .**

MODBUS FUNCTIONS:

FUNCTION 01	Reading of relay state
FUNCTION 3 or 4	Reading of n Words (16 bits-2 bytes). This function permits to read all the electrical parameters of the CVM-96-SP. Each parameters is a 32-bits long, hence two words are required to inquiry for a parameter. (4 bytes - XX XX XX XX).

a.- Registers assigned to different parameters measured by the ***CVM-96-SP***:

PARAMETER	***Units***	*MODBUS* ***REGISTERS*** ***HEXA-DECIMAL*** *(longs)*		
		PRESENT Value	***MAXIMUM Value***	***MINIMUM Value***
Voltage	V x 10	00-01	60-61	C0-C1
Current	mA	02-03	62-63	C2-C3
Active power	W	04-05	64-65	C4-C5
Reactive power	var	06-07	66-67	C6-C7
Power factor	P.F. x 100	08-09	68-69	C8-C9
Cos φ	Cos φ x 100	0A-0B	6A-6B	CA-CB
Frequency	Hz x 10	0C-0D	6C-6D	CC-CD
%THD V	% x 10	0E-0F	6E-6F	CE-CF
%THD I	% x 10	10-11	70-71	D0-D1
Active energy	Wh	12-13	72-73	D2-D3
Inductive reactive energy	varLh	14-15	74-75	D4-D5
Capacitive reactive energy	varCh	16-17	76-77	D6-D7
Apparent power	kVA	18-19	78-79	D8-D9
Power demand	Pd	1A-1B	7A-7B	DA-DB

EXAMPLE

INQUIRY **0A 04 00 00 00 0A 71 76**

0A	CVM-96-SP peripheral number, 10 in decimal
04	Reading function
00 00	Initial address (first register)
00 0A	Number of registers to be read
7176	CRC character

ANSWER **0A 04 14 00 00 08 4D 00 00 23 28 00 00 0F A0 00 00 00 90 00 00 00 60 CB 2E**

0A	CVM-96-SP number , 10 in decimal
04	Reading function – the one use for the inquiry
14	Bytes received (20)
00 00 08 4D	V x10 (register 00 Hex), in decimal 212.5 V
00 00 23 28	mA , in decimal 9000 mA
00 00 0F A0	W , in decimal 4000 W
00 00 00 90	varL , in decimal 144 varL
00 00 00 60	PF x 100, in decimal 96 PF
CB 2E	CRC character

b.- Reading digital outputs (relays) - Function 01 :

Inquiry : PP**01**0000**0008**CRC (PP = peripheral No.)
Answer : PP**01**01**XX**CRC

Where XX (hexadecimal byte) → translated to binary

b7	b6	b5	b4	b3	b2	**b1**	**b0**

bit **b0** = relay 1 (1 = ON ; 0 = OFF)
bit **b1** = relay 2 (1 = ON ; 0 = OFF)

11.- APPENDIX A: Second SET-UP of the CVM-96-SP

A second SET-UP menu is accessible in order to perform the configuration of the CVM-96-SP with other features different from factory-supplied ones.

To access this menu proceed as follows:

- Being the CVM-96-SP powered off, simultaneously press "⇕", "**max**" and "**min**" keys.
- Holding these keys pressed, powered the CVM-96-SP on.

Following messages will be then shown on display:

a.- COMMUNICATION PROTOCOL: MODBUS

SET	
PROT	Protocol:
BUS	☞ MODBUS (c) (BUS) protocol (*) See related section in this manual

- "⇕" key: to validate the choice and pass to the next set-up screen:

b.- SETTING COMMUNICATION PARAMETERS

SET	
Cdef	Default configuration
NO	☞ "**max**" key to switch from NO / YES

- If YES is chosen: the configuration is **001 / 9600 / 8 bits / N / 1 bit**

- If NO is chosen, pressing "⇕" following options successively appear:

- n PER	:	Peripheral No. 001 to 255
- Baud 1	:	baud rate 1.200 – 2.400 – 4.800 – 9.600 – 19.200
- Parity	:	No, even, odd
- LEN	:	(length) 8 bits
- Stop bits	:	1 or 2

c.- SET-UP LOCKING OR UNLOCKING

SET Up Unlo

☞ **Loc** (locked SET-UP) or **Unloc** (unlocked SET-UP)
Use the key "**max**" to modify the choice.

- Whether **LOC** is set, *when the SET-UP is accessed, configuration parameters can be visualized but cannot be modified*.

- To modify the previously set option, a **4-figure password** is required to be entered (in case that this password is not correct, this blinks and the previous menu is again accessed).

PASSWORD : 1234

To exit this set-up mode, the key RESET can be pressed at any moment (WARNING: whether the set-up is exited by pressing the key RESET some last modification might not be saved in memory) or reach the end of this set-up mode.