ANALYZER OF THE QUALITY OF ELECTRIC POWER SUPPLY

CVM-Q SERIES

USER'S MANUAL

(M 981 307 / 01A - GB)

© CIRCUTOR S.A.

CVM-Q USER'S MANUAL CONTENT PAGE

1.- BASIC INSTRUCTIONS 2
- 1.1.- Checking the contents of your package 2
- 1.2.- Models 3
- 1.3.- Safety warnings 3
- 1.4.- Operation instructions 3

2.- MAIN FEATURES 4

3.- ANALYSIS MODES 6

4.- DATA COLLECTION IN MEMORY (AUTOMATIC MODE) 6

5.- INSTALLATION & STARTUP 7
- 5.1.- Installation 8
- 5.2.- Connection terminals 10
- 5.3.- Connection drawings for the *CVM-Q*: 12

6.- OPERATION MODE 15
- 6.1.- Voltage screen 16
- 6.2.- Event logs screen 16
- 6.3.- Harmonic screen 18
- 6.4.- Harmonic content screen 18

7.- SETTING THE *CVM-Q* UP 19
- 7.1.- Choice of connection mode 20
- 7.2.- Transformation ratios of voltage transformers 21
- 7.3.- Definition of the monitored network 22
- 7.4.- Integration time 23
- 7.5.- Choice of harmonic distortion calculating mode: D% or THD% 24
- 7.6.- Quality levels setting 24
- 7.7.- Data collection in memory 27
- 7.8.- Relay output (alarms) setting 29

8.- SPECIFICATIONS 33

9.- SAFETY CONSIDERATIONS 35

10.- MAINTENANCE 35

11.- TECHNICAL SERVICE 35

12.- COMMUNICATIONS 36
- 12.1.- To take into account!: 36
- 12.2.- Connection to a PC set 37
- 12.3.- MODBUS © Protocol 39

13.- APPENDIX A: Second SETUP of the *CVM-Q* 44

1.- BASIC INSTRUCTIONS

1.1.- Checking the contents of your package

This manual is aimed to familiarize the user with the operation of the power supply quality analyzer model ***CVM-Q***, in order to get the best from its features. After receiving the analyzer, please check the following points:

a) The delivered material meets your order specifications.

b) After unpacking, check that the instrument has not been damaged in transit.

c) The standard set includes the pertinent user's manual.

The manual you hold in your hands contains information and warnings about the ***CVM-Q*** that the user should respect in order to guarantee a proper operation of all the instrument functions and keep its safety conditions.

Before powering the analyzer on please check following points:

(a) Supply voltage: **see specifications in the lable stuck on the rear side**

- **Standard: 110 V ... 230 V a.c.** - Single-phase, 50 ... 60 Hz
- *On demand: Other supply voltages*

(b) Maximum voltage in the voltage measuring circuit:

- **Standard: According to connection 500 V a.c./300 V a.c./150 V a.c.**
- *On demand: Other models*

1.2.- Models

Code	Model	RS-485	Relay output
7 71 098	CVM-Q-RS485-C2	X	X
7 71 097	CVM-Q-RS232-C2	X	X

1.3.- Safety warnings

The manual you hold in your hands contains information and warnings about the ***CVM-Q*** that the user should respect in order to guarantee a proper operation of all the instrument functions and keep its safety conditions.

If the instrument is not used as manufacturer's specifications, the protection of the instrument can be damaged

When any protection failure is suspected to exist (for example, it presents external visible damages), the instrument must be immediately powered off. In this case contact a qualified service representative.

1.4.- Operation instructions

The ***CVM-Q*** is a programmable instrument, so offering diverse operation modes which can be user-selected from the available programming menus.

Please, before initiating works with the ***CVM-Q***, thoughtfully read the paragraphs involving **INSTALLATION & STARTUP and SETTING THE *CVM-Q* UP**, in order to select the most suitable operation mode for your requirements.

Note that with the instrument powered on, the terminals could be dangerous to touching, and cover opening actions or elements removal may allow the access to dangerous parts. Therefore, the instrument must not be used until this is completely installed.

2.- MAIN FEATURES

The **CVM-Q** is a programmable measuring instrument, offering several operation possibilities selectable in its SET-UP option. Before power supplying the instrument, read the **CONNECTIONS and SET-UP** sections and choose the most suitable operation mode for getting your desired data.

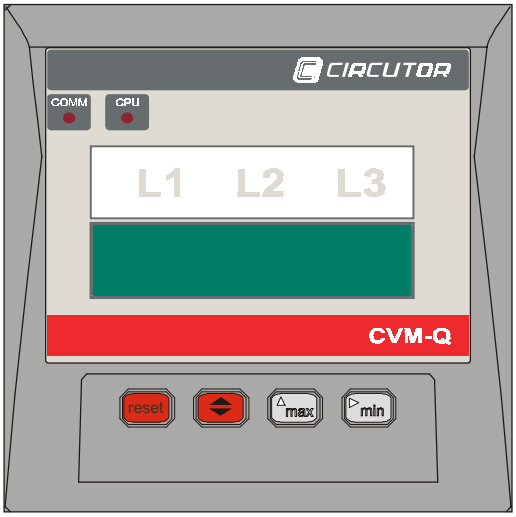

The ***CVM-Q*** is an analyzer expressly developed for the supervision of the quality of electric power supply, for that reason, it only provides voltage inputs (isolated by means of transformers).

Among their main characteristics, we can remark following:

- Wide range of both supply and measuring voltages.
- Connection to either 3 or 4-wire distribution systems.
- On-board battery which permits the instrument to go on recording works even in case of supply voltage loss.
- On-board memory for saving all parameters measured by the analyzer.
- Communication via RS-232 or RS-485 (according to the model).

The extensive supply voltage range of the ***CVM-Q*** together with its on-board battery, which enables the analyzer to go on operation during about 2 minutes in case of a supply voltage loss, assure the continuity of the measuring and recording processes before any event related to a voltage drop (interruption or dip).

As an analyzer of the quality of the electric power supply, the ***CVM-Q*** only provides voltage inputs. Over these inputs, it will analyze all cycles from all three voltage phases to detect the occurrence of any event (voltage dip, voltage swell, interruption,...).

CVM-Q analyzers are equipped with an **on-board memory** for the collection of quality parameters as well as of events.

The different information recorded by the ***CVM-Q*** into its on-board memory is distributed among three file types:

- *.STD file: File which contains all values which are periodically recorded (voltage, frequency, voltage harmonic distortion and the harmonic content).
- *.EVQ file: This file contains all events observed in the electric power supply (voltage dips, voltage swells, interruptions) together with some supplementary information about these events (instant of the event occurrence, maximum/minimum voltage, average voltage,...).

3.- ANALYSIS MODES

CVM-Q analyzers can run under different operation modes according to the previous setting and connection arrangement.

Most remarkable operation settings are following enumerated ones:

- Measurement and collection in memory of main power quality parameters (voltage values and harmonics).
- Setting of a voltage threshold to define diverse event occurrences (voltage dips, voltage swells and interruptions). Also an optional setting of a hysteresis value for each individual threshold.
- Accomplishment of quality analysis either over 3-wire or 4-wire distribution systems. In accordance to the choice, all quality measurement will be referred to the line-to-neutral or line-to-line voltage. This choice is set though an internal connection.

4.- DATA COLLECTION IN MEMORY (AUTOMATIC MODE)

The ***CVM-Q*** is equipped with an on-board clock for both date and time that permits the automatic data recording process in memory to be set at regular time periods.

So, the different information recorded by the ***CVM-Q*** into its on-board memory is distributed among three file types:

- *.STD file: File which contains all values which are periodically recorded (voltage, frequency, voltage harmonic distortion and the harmonic content).
- *.EVQ file: This file contains all events observed in the electric power supply (voltage dips, voltage swells, interruptions) together with some supplementary information about these events (instant of the event occurrence, maximum/minimum voltage, average voltage,...).

The ***CVM-Q*** is equipped with an on-board rotary memory for data collection; which means that once this memory is full, new values overwrite oldest ones. Therefore, if no data is wanted to be lost, data must be retrieved from the memory before oldest values will be overwritten.

The ***CVM-Q*** on-board memory for data storage has two independent allocated areas, in the way that the following information is saved into each area:

- First area: Information about periodical logs (STD)
- Seconds area: Captured events (EVQ) and incidents on the ***CVM-Q*** (EVE).

The size of the memory areas is user-programmable, which enables the memory to be arranged according to the specific demands of our installation.

5.- INSTALLATION & STARTUP

The manual you hold in your hands contains information and warnings that the user should respect in order to guarantee a proper operation of all the instrument functions and keep its safety conditions. The instrument must not be powered and used until its definitive assembly on the cabinet's door.

If the instrument is not used as manufacturer's specifications, the protection of the instrument can be damaged

When any protection failure is suspected to exist (for example, it presents external visible damages), the instrument must be immediately powered off. In this case contact a qualified service representative.

5.1.- Installation

Before powering the instrument for the first time, please check following points:

a.- Power supply: see rear part of your *CVM-Q*

- Standard supply : *Single-phase* ***110 V ... 230 V ~ (a.c.)***

❑ *On request: other voltages*

- *Supply voltage tolerance* : *- 10 % / + 15*
- *Frequency* : *50 - 60 Hz*
- *Connection terminal* : *Terminals 5 - 6 (Power supply)*
- Burden : 5 VA

b.- Maximum voltage in the voltage measuring circuit:

❑ **Standard: Acc. to connection 500 V a.c. / 300 V a.c. / 150 V a.c. 40 to 65 Hz**

c.- Operation conditions :

- Operation temperature range : -10 to +50 ºC
- Humidity : 5 to 95 % R.H. (without condensation)
- Altitude : below 2,000 m

d.- Safety :

- Designed to meet protection class III - 300 V a.c. as per EN 61010.
- Protection against electric shock by class II double-insulation

Assembly: ⚠

Instrument is to be mounted on panel (cut-out 138^{+1} x 138^{+1} mm, as per DIN 43 700). All connections keep inside the cabinet.

Note that with the instrument powered on, the terminals could be dangerous to touching and cover opening actions or elements removal may allow accessing dangerous parts. Therefore, the instrument must not be used until this is completely installed.

The instrument must be connected to a power supply circuit protected with gl type (IEC 269) or M type fuses rated between 0.5 and 2 A. This circuit should be provided with a circuit breaker or any equivalent element to connect (ON) or disconnect (OFF) the instrument from the power supply network. The supply and measuring voltage circuits will be both connected through a wire with a minimum cross-section of 1 mm^2.

5.2.- Connection terminals

- ***CVM-Q* RS-485 (see lable on the rear part)**

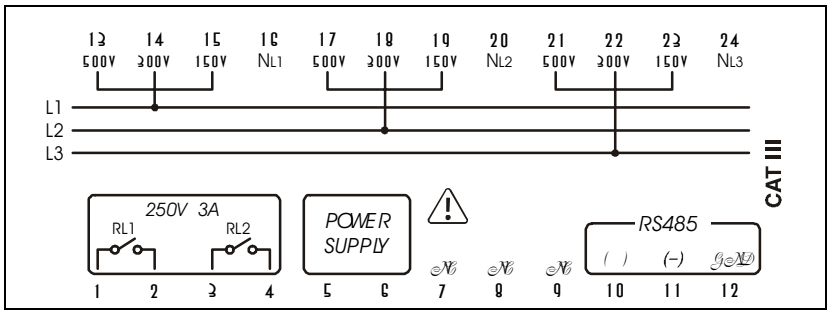

No.	Terminal description
1	*Relay RL1 Output*
2	*Relay RL1 Common*
3	*Relay RL2 Output*
4	*Relay RL2 Common*
5	Supply AL1
6	Supply AL2
7	Not used
8	Not used
9	Not used
10	*RS-485 (+)*
11	*RS-485 (-)*
12	*RS-485 (GND)*

No.	Terminal description
13	Input L1 500 V
14	Input L1 300 V
15	Input L1 150 V
16	Common L1
17	Input L2 500 V
18	Input L2 300 V
19	Input L2 150 V
20	Common L2
21	Input L3 500 V
22	Input L3 300 V
23	Input L3 150 V
24	Common L3

- ***CVM-Q* (RS-232) (see lable on the rear part)**

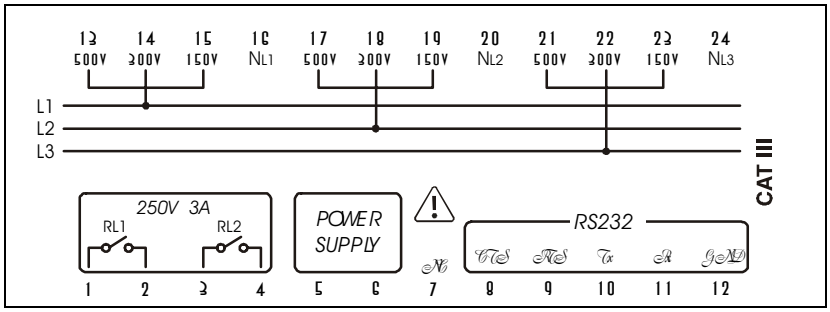

No.	Terminal description
1	*Relay RL1 Output*
2	*Relay RL1 Common*
3	*Relay RL2 Output*
4	*Relay RL2 Common*
5	Supply AL1
6	Supply AL2
7	Not used
8	*RS-232 (CTS)*
9	*RS-232 (RTS)*
10	*RS-232 (Tx)*
11	*RS-232 (Rx)*
12	*RS-232 (GND)*

No.	Terminal description
13	Input L1 500 V
14	Input L1 300 V
15	Input L1 150 V
16	Common L1
17	Input L2 500 V
18	Input L2 300 V
19	Input L2 150 V
20	Common L2
21	Input L3 500 V
22	Input L3 300 V
23	Input L3 150 V
24	Common L3

5.3.- Connection drawings for the *CVM-Q*:

a.- Three-phase network - 4 wires (low voltage):

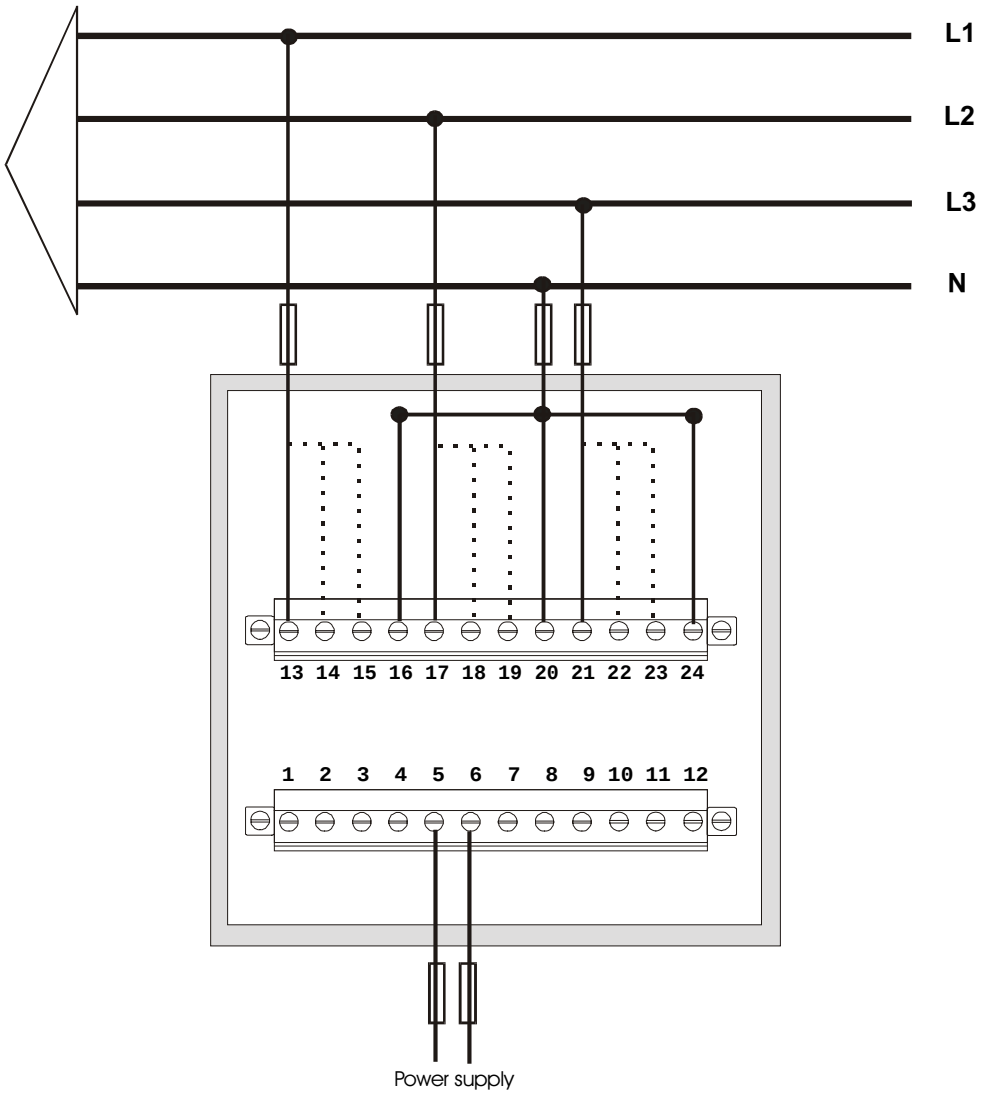

b.- Three-phase network - 3 wires (low voltage):

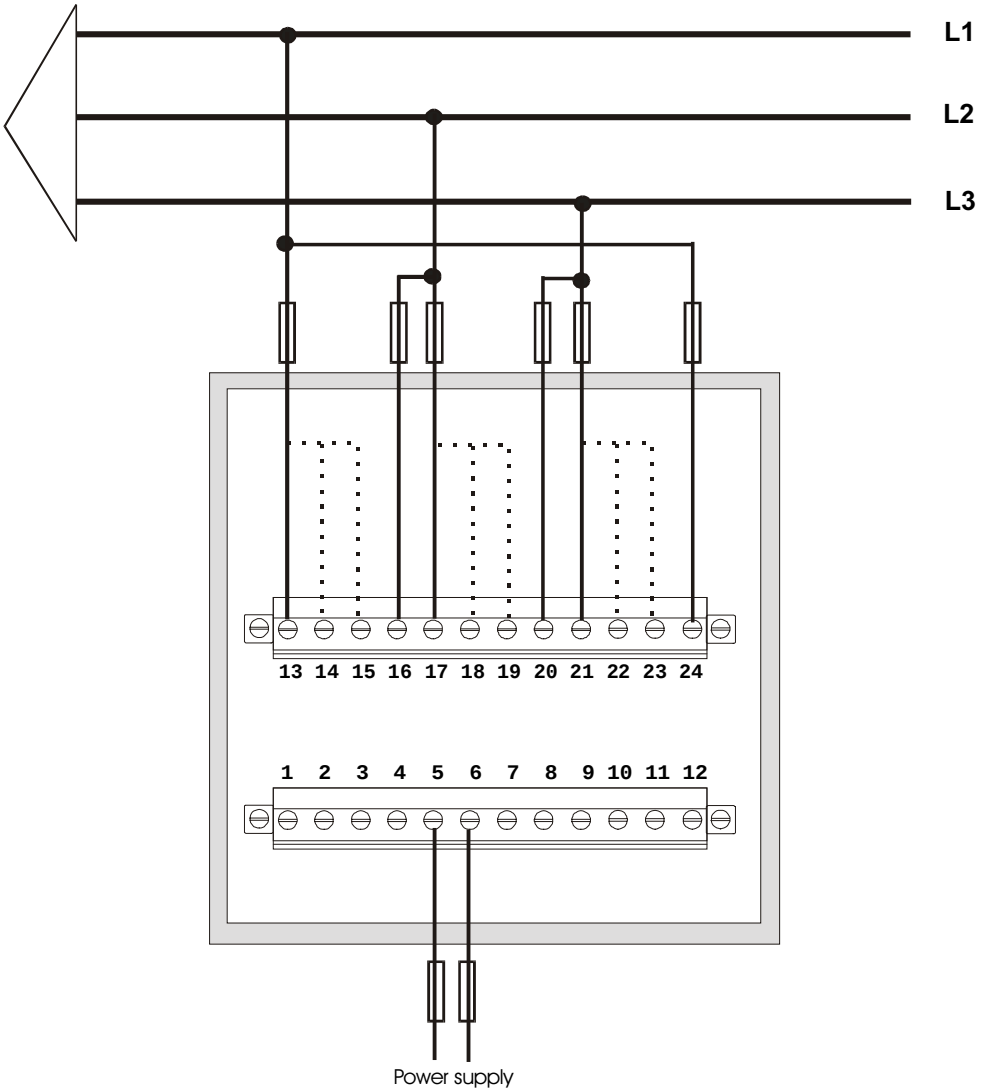

- **c.-** Three-phase network - 3 wires (2 P.T.):

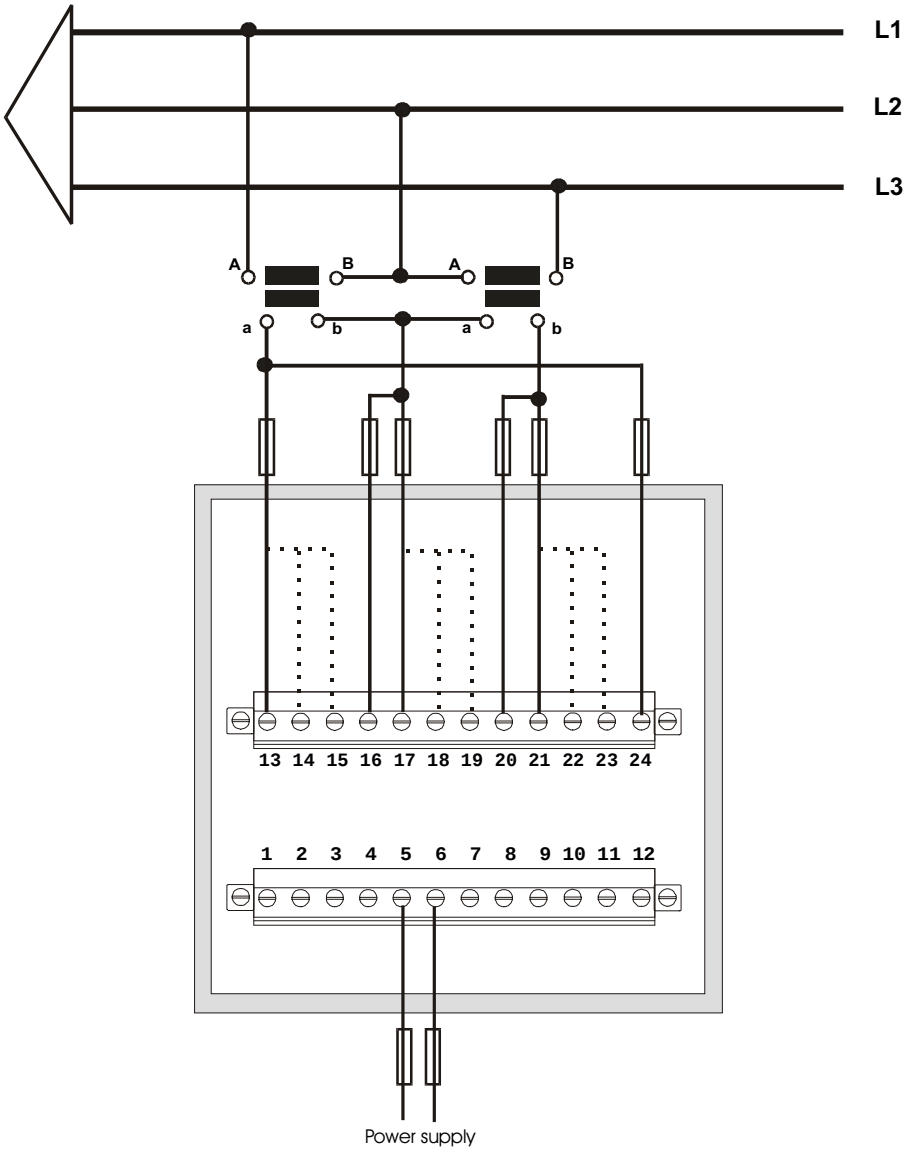

6.- OPERATION MODE

The quality analyzer has 1 two-line, led type, display.

When the ***CVM-Q*** is powered on, following screens are successively shown:

```
CVM-Q      Vxx.xx
     CIRCUTOR
```

☞ Software version

```
CARD TYPE    xxxxxxxx
xxxxxxxxxxxxxxxxxxxx
```

☞ Hardware configuration

After some seconds, the analyzer is ready for the regular operation and shows one of the available screens: the voltage screen.

- ⬍: allows the screen in display to be changed.
- **"max"** and **"min"**: their use varies depending on the active screen at each moment.
- "**reset**": the system is reset as if the analyzer would be powered off and then powered on back. The most immediate result is that maximum and minimum values recorded will be automatically deleted from the internal memory. During the setup process, when the "**reset**" key is pressed, this setup process will be exited without saving any modification that the user might have done (this circumstance will depend on the setup section that is accessed when the reset action is carried out) and the reset of the analyzer will be also completed.

The analyzer display will be automatically shutdown under following conditions:
- **When no key is pressed during more than 5 minutes.**
- **When the analyzer is supplied by its on-board battery.**

The display will be on again when:
- **Any key is pressed**
- **After 30 seconds from the recovery of the mains supply**

6.1.- Voltage screen

Display of the voltage measured at each phase, as well as, announcement of any possible event that might be happening in the network at the present moment.

```
  L1   L2   L3
211.8~ 212,0~ 220,1~
 02/07/01  10:33:21
```

The symbol next to each voltage can vary so that it indicates:

- ∿: Right voltage inside allowable range.
- ∿: Interruption.
- ↑: Voltage swell.
- ↓: Voltage dip.

6.2.- Event logs screen

Any event recorded into the on-board memory can be viewed in screen:

```
  L1   L2   L3
02/07/01 11:22:38,49
*  DIP  L1  206,1 V
```

☞ Event initial date

☞ Event type, phase and average voltage

The record marked with (*) is the last record within the file, that is, the most recent one.

The type of the recorded event is defined according to the below table:

Message	Event type
SWELL	Voltage swell
DIP	Voltage dip
INTER	Interruption

Use the keys “**max**” and “**min**” to cyclically move along the recorded events:

- “**max**”: Posterior event to the viewed one.
- “**min**”: Preceding event to the viewed one.

If no recorded event exists, then you will read:

☞No recorded event exists in memory

6.3.- Harmonic screen

Display of the % of the voltage harmonic distortion at each phase. These values are calculated in relation to the rated frequency which has been user-programmed in the pertinent menu option.

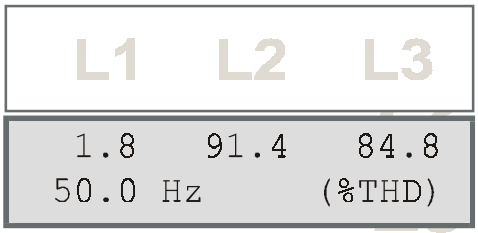

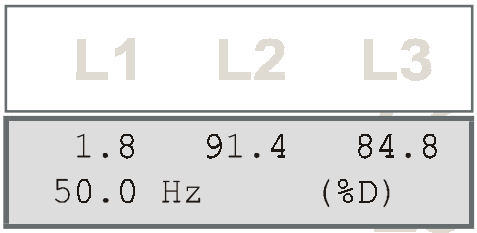

Once in this screen, by pressing the key **"max"**, the user can see the maximum value of the THD or D rate that has been measured in the installation.

6.4.- Harmonic content screen

Display of the voltage harmonic content at each phase. Two visualization screens are available:

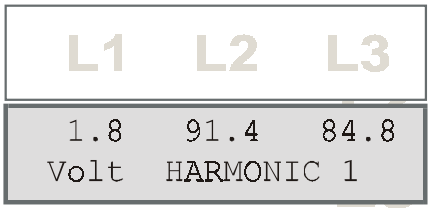

☞ **Harmonic 1:** The fundamental amplitude.

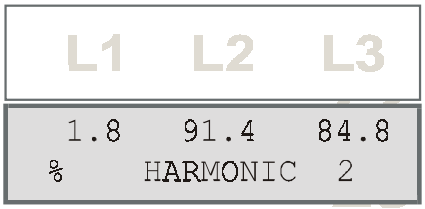

☞ **Harmonic 2 .... Harmonic 31:** Ratio of the voltage of every single harmonic to the fundamental amplitude.

The application of each key is for this case is as follows:

- **"min"**: To view the higher order harmonic.
- **"max"**: To view the lower order harmonic.

7.- SETTING THE *CVM-Q* UP

The setup procedure of the ***CVM-Q*** is accomplished by means of several SETUP options.

> ☞ For accessing the **setup menu** the keys **max** & **min** must be simultaneously pressed once the analyzer is at the main screen.

When accessing the **SETUP,** the below message is shown for some seconds in screen:

```
(SETUP) key unlock
```

☞ (unlocked SETUP): when the SETUP is accessed, configuration parameters can be either visualized and modified.

Or otherwise:

```
(SETUP) key lock
```

☞ (locked SETUP): when the SETUP is accessed, configuration parameters can be visualized but these cannot be modified.

Once into the SETUP, use the keyboard to select different options:

- The key [⇕] validates de value and pass to the next menu.
- The key "**max**" permits the user to select among different options in a menu, or to increase a digit when a variable is being entered.
- The key "**min**" permits the user to move the cursor along the digits.

Different options are following shown in a sequential mode:

1. Choice of connection mode: star / delta and voltage inputs in use.
2. Voltage transformation ratio.
3. Definition of the monitored network (rated voltage, rated frequency)
4. Integration period
5. Choice of harmonic distortion calculating mode: D% or THD%
6. Quality levels setting
7. Data collection in memory
8. On-board clock setting
9. Relay output (alarms) setting

7.1.- Choice of connection mode

- **Star / Delta**

The ***CVM-Q*** can either work in 3 or 4-wire distribution systems. This choice is defined by the connection mode, but this mode must be also set in the analyzer.

```
(SETUP) (△/⅄)
         V1   V2   V3
```

or

```
(SETUP) (△/⅄)
         V12 V23 V31
```

This choice in the setup is basically aimed for information purposes as this permits the user to know if recorded values refer to line-to neutral (U1,U2 and U3) or line-to-line voltages (U12, U23 and U31).

a) To select one of the voltage options just press the black key "**max**" and both options will alternately appear.

b) When you get in the display the desired option just press the "⬍" key to validate it and access the next setup option.

- **Voltage inputs in use**

You must define the voltage inputs that are used for the ***CVM-Q*** measuring actions.

```
(SETUP) SCALE   VOLTS
          XXX
```

☞ Voltage inputs: 150 V, 300 V and 500 V

This parameter is essential for the display and record of values under the right scale.

7.2.- Transformation ratios of voltage transformers

Set the transformation ratio of voltage transformers used for measuring purposes. In case of a direct measurement of the voltage (no voltage transformer used) then just set the same primary and secondary value, for instance 00001/001.

- **Voltage primary value**

You will see in screen:

```
(SETUP) PRIMARY
        000001
```

☞ Voltage primary value

a.- To write or modify the value just repeatedly press the "**max**" key and the blinking digit value will be increased.

b.- When the value on screen is the proper one, we can pass to the next digit by pressing the "**min**" key in order to modify the other values.

c.- When the blinking digit is the last one, pressing the "**min**" key we go back to the initial value: set values can be again modified if necessary.

d.- Press"⇕" to pass to the next setup option.

- **Voltage secondary value**

Set the voltage secondary value at this point:

```
(SETUP) SECUNDARY
        001
```

☞ Voltage secondary value

Proceed as for the latest section.

7.3.- Definition of the monitored network

Set now the main specification of the monitored network:

- **Rated voltage**

A right configuration of this point is essential since it is the reference for setting the levels of voltage dips, voltage swells and interruptions.

```
(SETUP) V.NOMINAL
         230
```

☞Rated voltage of the network

If any voltage transformer is used for measuring action, then the rated voltage to be set must be referred to the transformer secondary value.

- **Rated frequency**

The calculation of the RMS value of each semi-cycle is done by means of a fixed window over a period of one semi-cycle. The duration of this period is determined from the user-programmed rated frequency.

```
(SETUP) Hz.NOMINAL
         50
```

☞Rated frequency of the network (40-65 Hz)

Common values to be set are 50 and 60 Hz.

7.4.- Integration time

To effectuate the calculation of the average, maximum and minimum voltage and frequency values, the ***CVM-Q*** obtains one value each second. This value corresponds to the average of RMS values which have been calculated within the sliding window defined by the user.

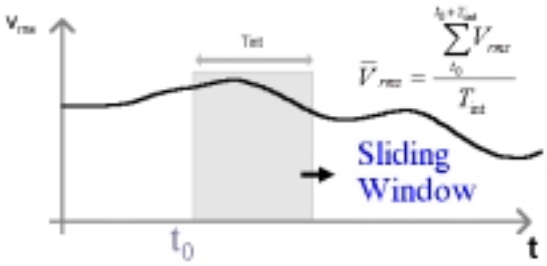

The most common value is 1 s, which means that the instantaneous values will be then displayed.

```
(SETUP) MEASURE TIME
          01
```

☞ Period between 1 and 60 s

Note:

This above value does not affect over the detection process of quality events: voltage dip, interruption and voltage swell.

7.5.- Choice of harmonic distortion calculating mode: D% or THD%

Two modes for the harmonic distortion calculation, and further record into memory, can be selected:

a) **D %:** total value of the harmonic distortion referred to the fundamental value.

b) **THD %**: total value of the harmonic distortion referred to the RMS value.

The selected option will be the one shown in screen.

```
(SETUP) SELEC THD/D
        %THD
```

or

```
(SETUP) SELEC THD/D
        %D
```

- To select any option just press "**max**" to switch between the two available options.
- Press " " to validate the choice and pass to the next setup option

7.6.- Quality levels setting

For the detection of quality events (voltage dips, interruptions and voltage swells) a right configuration of following described sections becomes essential to obtain reliable results.

All levels defined as events are referred to the user-programmed rated voltage (See Section 7.3.-).

Notes:

The voltage swell level must be always set to a values higher than 100 %.
Voltage dip and interruption levels must be always set to a values lower than 100 %.
The most usual value for the hysteresis options is 1 %.

Levels to be user-defined are below ones:

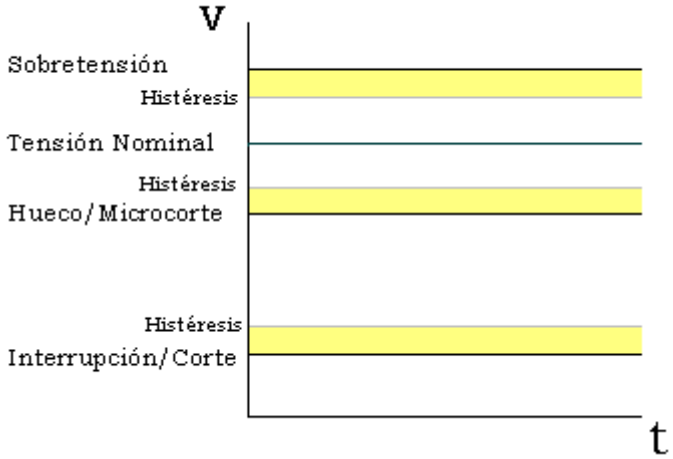

When and event happens, the analyzer will save in memory a record with the following information about the event: the instant of the event occurrence, the duration of the event, the maximum or minimum voltage of the event (depending on the event type), and the previous voltage to the event.

- **% of voltage swell threshold**

Every semicycle whose RMS value is over the defined limit value (defined as a percentage of the rated voltage) is stated to be a voltage swell

```
(SETUP) V.SWELL
          xxx.x %
```

☞ % of the rated voltage. (100% ... 150%)

- **% of voltage dip threshold**

Every semicycle whose RMS value is below the defined limit value (defined as a percentage of the rated voltage) is stated to be a voltage dip.

```
(SETUP) V.DIP
          xxx.x %
```

☞ % of the rated voltage. (50% ... 95%)

- **% of interruption threshold**

Any voltage drop whose value is below the defined limit value (defined as a percentage of the rated voltage) is stated to be an interruption.

```
(SETUP) V.INTERRUP
        xxx.x %
```

☞ % of the rated voltage. (1% ... 20%)

- **Voltage swell hysteresis**

A voltage swell hysteresis value can be defined to set a different value for the voltage swell event starting and ending point. Thus, a voltage swell event starts when the voltage swell threshold is exceeded, and ends when the voltage value is under the value defined by the subtraction of the voltage swell hysteresis value from the voltage swell threshold.

```
(SETUP) HYSTE SWELL
        x.x %
```

☞ % of the voltage swell threshold (0% ... 9,9%)

- **Voltage dip hysteresis**

A voltage dip hysteresis value can be defined to set a different value for the voltage dip event starting and ending point. Thus, a voltage dip event starts when the voltage dip threshold is not reached, and ends when the voltage value is over the value defined by the addition of the voltage dip hysteresis value to the voltage dip threshold.

```
(SETUP) HYSTE DIP
        x.x %
```

☞ % of the voltage dip threshold (0% ... 9,9%)

- **Interruption hysteresis**

An interruption hysteresis value can be defined to set a different value for the interruption event starting and ending point. Thus, an interruption event starts when the interruption threshold is not reached, and ends when the voltage value is over the value defined by the addition of the interruption hysteresis value to the interruption threshold.

```
(SETUP) HYSTE INTER
        x.x %
```

☞ % of the interruption threshold (0% ... 9,9%)

7.7.- Data collection in memory

The ***CVM-Q*** is equipped with an on-board memory to periodically save logs from all measured electrical parameters (Voltage, frequency, THD....)

- **Recording period**

Integration period for data recording into memory of all electrical parameters, to be further analyzed and managed from a PC or PLC set.

```
(SETUP) PERIODE REG
        00m15s
```

☞Value between 5 s and 60 minutes

- **Deleting files:**

Always that any configuration parameter of the ***CVM-Q*** is modified, all data recorded into the on-board memory will be automatically deleted. Besides, this recorded data can also be manually deleted if required.

(SETUP) DELETE EVQ no	☞Deleting the quality events file (EVQ)
(SETUP) DELETE STD no	☞ Deleting the standard file (STD)

- **Files size**

In order to obtain the maximum efficiency from the analyzer on-board memory capacity (1 Mbyte), the user can re-arrange the allocated space for each kind of logs.

SIZE REG STD EVQ 80% 20%	☞Value between 10 % and 90 %

- The key "**max**" increases the allocated memory space for the STD file.
- The key "**min**" reduces the allocated memory space for the STD file.

Note:

The modification of this option automatically gives rise to the loss of all data recorded in the on-board memory.

- **On-board clock setting**

(SETUP) DATE 04/07/01 14:55:12	☞Setting time and date of the on-board clock

7.8.- Relay output (alarms) setting

Every single relay output of the CVM-Q can be set to act as an alarm. Thus, the user must define for each output the following parameters:

①	Enabled / Disabled alarm
②	Any parameter measured by the CVM-Q
③	MAXIMUM value
④	MINIMUM value
⑤	Delay for the alarm conditions

a) Enabled / Disable alarm

```
(SETUP) ALARM 1
        yes
```

Alarm enabled

```
(SETUP) ALARM 1
        no
```

Alarm disabled

Set at this point the wish of using the relay output for alarm purposes. If the choice is “yes”, then the setup process of the alarm specifications will be accessed (sections b, c & d).

b) Setting the parameter to be controlled:

The user must set the parameter that will define the alarm condition for every single output relay.

```
(SETUP) ALARM-VARI
        xxx
```

☞ Parameter under control

Allowable electrical parameters that can be set as alarm conditions are these within the below table:

Parameter	**Code** Phase L1	**Code** Phase L2	**Code** Phase L3
Voltage	56	57	58
Frequency	55		
THD V %	52	53	54

And also any parameter related to the harmonic content:

Parameter	**Code** Phase L1	**Code** Phase L2	**Code** Phase L3
Fundamental	500	550	600
Harmonic 2	501	551	601
Harmonic 3	502	552	602
Harmonic 4	503	553	603
Harmonic 5	504	554	604
Harmonic 6	505	555	605
Harmonic 7	506	556	606
Harmonic 8	507	557	607
Harmonic 9	508	558	608
Harmonic 10	509	559	609
Harmonic 11	510	550	610
Harmonic 12	511	551	611
Harmonic 13	512	552	612
Harmonic 14	513	553	613
Harmonic 15	514	554	614
Harmonic 16	515	555	615
Harmonic 17	516	556	616
Harmonic 18	517	557	617
Harmonic 19	518	558	618
Harmonic 20	519	559	619
Harmonic 21	520	550	620
Harmonic 22	521	551	621
Harmonic 23	522	552	622
Harmonic 24	523	553	623
Harmonic 25	524	554	624
Harmonic 26	525	555	625
Harmonic 27	526	556	626
Harmonic 28	527	557	627
Harmonic 29	528	558	628
Harmonic 30	529	559	629
Harmonic 31	530	550	630

c) Setting the maximum and minimum values:

```
(SETUP) ALARM-HIGH
        xxxx
```

```
(SETUP) ALARM-LOW
        xxxx
```

The key "**max**" will increase the value of the blinking digit (0,1...9). Use the key "**min**" to pass to the following digit.

“,” → decimal point	**Example:**	**230,0**	**→ 230,0 V**
“.” → stands for “k”		**230.0**	**→ 230.000 V = 230 kV**

d) Setting the delay

The user can set a delay time to be waited before the relay output activation when the alarm condition happens.

This delay, therefore, implies that the alarm will be activated only in case that the alarm condition is continuously happening during a certain time period (delay).

```
(SETUP) ALARM-DELAY
        xxxx
```

☞ Delay (5 to 3600 s)

☑ This procedure is applied alike for the alarm deactivation case.

To access the next option just press ⬍: the second relay output can be now configured.

```
(SETUP) ALARM 2
        no
```

☞ Setting the second relay (alarm)

* Proceed equal than for the first relay.

When the user-configuration process of the second relay is completed, the new setup is saved in memory and the analyzer starts working according to it.

☑ **ALARM ACTIVATION:** Alarms operation depends on the set values of MAXIMUM and MINIMUM options.

MIN +	**MAX +** **max > min**	**ON OFF ON** **———|———|======|———** **0 Min Max**
MIN +	**MAX +** **max < min**	**OFF ON OFF** **====|====|————|======** **0 Max Min**
MIN --	**MAX +**	**ON OFF ON** **————|====|===|————** **Min 0 Max**
MIN +	**MAX --**	**OFF ON OFF** **=======|———|———|======** **Max 0 Min**
MIN --	**MAX --** **max > min**	**ON OFF ON** **————|=====|———|———** **Min Max 0**
MIN --	**MAX --** **max < min**	**OFF ON OFF** **=====|————|=====|======** **Max Min 0**

ON = alarm activated ----------> relay closed

OFF = alarm deactivated --------> relay open

8.- SPECIFICATIONS

Power supply : see specifications on the rear part of the *CVM-Q*

CVM-Q.... **:** Single-phase : 110 V ... 230 V a.c.
Voltage tolerance : -10% / +15%
Frequency : 50 - 60 Hz

Burden ..... 5 VA
Operation temperature..... -10 ºC to 65 ºC
Humidity ..... 5% to 95% (without condensation)

Measuring Circuit:
Rated voltage ..... 150 V a.c. / 300 V a.c. / 500 V a.c.
Frequency ..... 40 to 65 Hz
Measuring circuit burden... < 0.25 VA

Accuracy:
Voltage ..... 0.5 % of readout ± 1 digit

Test conditions :
- Direct voltage measurement
- Temperature between + 5 ºC and + 50 ºC
- Relative humidity between 5% and 95% (without condensation)

Storage temperature: -15ºC to +70ºC

Mechanical Characteristics:
- Connection: Pluggable connection terminal
- Case material: Self-extinguishable, V0 plastic
- Protection Assembled unit (frontal): IP 55
  Un-assembled unit (side and rear covers): IP 31
- Dimensions 144 x 144 mm - depth: 84 mm
- Weight 0.603 kg

Output relays features:

- Maximum switching load : 2500 VA
- Maximum switching voltage : 400 V a.c.
- Maximum switching current : 10 A
- Mechanical endurance : 3×10^7 operations
- Energy / alarms pulses : max. 1 pulse / s

At full load: (250 V a.c. / 10 A)

- Electrical endurance : 1×10^5 operations
- Maximum operation cadence : 450 operation / hour

- Safety ..... Category III - 300 V a.c. / 520 a.c. - as per EN-61010

Protection against electric shock by class I double-insulation

Standards: IEC 664, VDE 0110, UL 94, EN-61010-1

Dimensions :

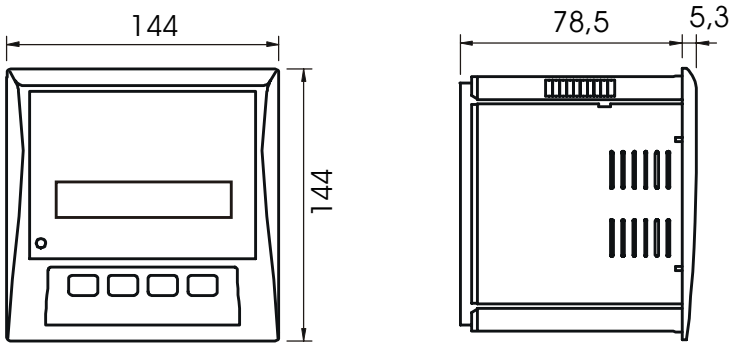

9.- SAFETY CONSIDERATIONS

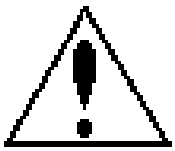

The user should take into account all installation instructions indicated in sections INSTALLATION & STARTUP and TECHNICAL SPECIFICATIONS of this manual.

Notice that with the instrument powered on, the terminals could be dangerous to touching, and cover opening or elements removal actions may allow the access to dangerous parts. The analyzer is factory-shipped in proper operating conditions.

10.- MAINTENANCE

The ***CVM-Q*** does not require any special maintenance. No adjustment, maintenance or repairing action should be done over the instrument open and powered and, should those actions are essential, high-qualified operators must perform them.

Before any adjustment, replacement, maintenance or repairing operation is carried out, the instrument must be totally disconnected from any power supply source. When any protection failure is suspected to exist, the instrument must be immediately put out of service. The instrument's design allows a quick replacement in case of any failure.

11.- TECHNICAL SERVICE

For any inquiry about the instrument performance or If any failure happens, please contact to CIRCUTOR's technical service.

CIRCUTOR S.A. - After-sales service
Lepanto, 49
08223 - TERRASSA (BARCELONA - SPAIN)
Tel - + 34 93 745 29 00
fax - + 34 93 745 29 14
E-mail : central@circutor.es

12.- COMMUNICATIONS

One or some ***CVM-Q***... units can be connected to a PC. With this system we can get all the parameters in one central point of reading. The ***CVM-Q***... has a serial RS-485 or RS-232 type output (according to the model). If we connect more than one device to the same communication line (RS-485), we have to assign to each discrete analyzer a different code or direction (from 01 to 255), since the PC needs the identification of every measuring point.

12.1.- To take into account!:

- **PROTOCOL:** MODBUS © (**Question / Answer)**
- ***CVM-Q* DEFAULT CONFIGURATION :** 001 / 9.600 / 8 bits / N / 1 bit
- Available baud rates: 1,200 – 2,400 - 4,800 – 9,600 – 19,200 bauds
- **RS-485 type output:**

  - The RS-485 connection will be carried out by means of a **twisted and screened cable,** with a minimum of 3 wires, with a maximum distance between the ***CVM-Q*** and the last peripheral of 1,200 m. The ***CVM-Q*** uses a RS-485 communication bus that enables the connection of **a maximum of 32 devices in parallel (Multi-point bus) per each single port used in the PC**.

- **RS-232 type output:**

  -RS-232 connection will be carried out by means of a **twisted and screened cable,** with a minimum of 5 wires, with a maximum distance between the ***CVM-Q*** and the P.C. of 15 m **(point-to-point bus)**.

12.2.- Connection to a PC set

- **Connection of a RS-485 network to a PC (RS-232)**

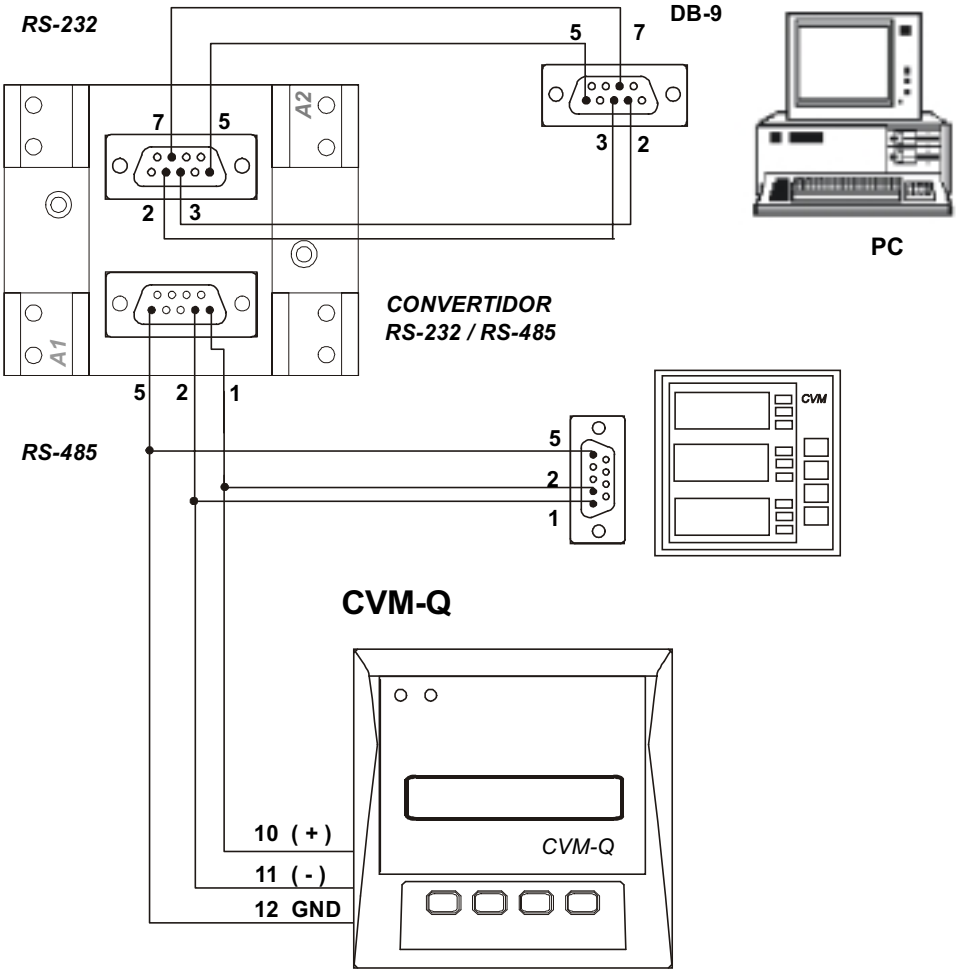

*** If you are using the RS485/232 converter with RTS control ability (code 770208), then the connection of the pin#7 in the RS-232 side is not required.**

- **Connection of a RS-232 output to a PC (RS-232)**

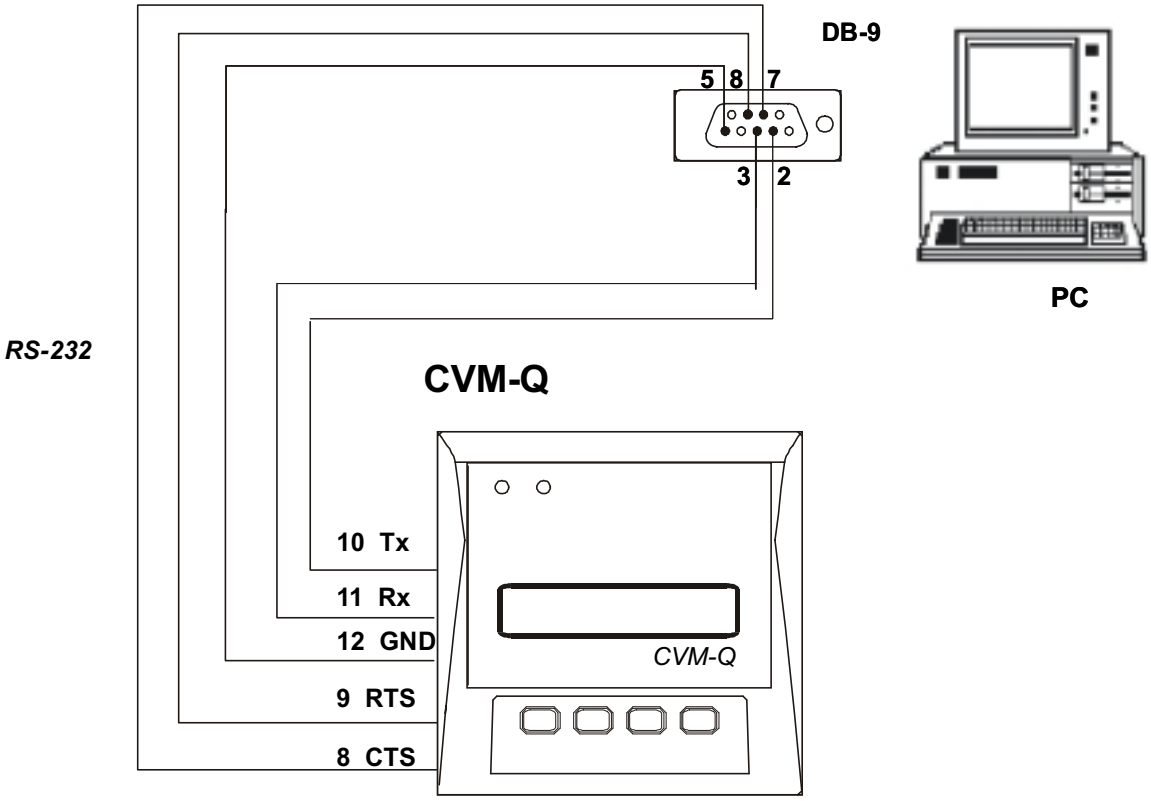

12.3.- MODBUS © Protocol

The ***CVM-Q*** analyzer can communicate by means of the **MODBUS ©** protocol, as it is following described:

When the ***CVM-Q*** communicates with MODBUS protocol, it uses the **RTU mode** (Remote Terminal Unit). Each 8-bits byte in a message contains two 4-bits hexadecimal characters.

The format for each byte in RTU mode is:

* *Code*	:	**8-bits binary,** hexadecimal 0-9, A-F **Two hexadecimal characters** contained in each 8-bits field of the message.
* *Bits per Byte*	:	8 data bits
* *CHECK- ERROR Field*	:	**CRC type** (Cyclical Redundancy Check).

MODBUS FUNCTIONS IMPLEMENTED IN THE CVM-Q:

FUNCTION 01	Reading of the relay status
FUNCTION 3 & 4	Reading of n Words (16 bits-2 bytes). This function permits to read all the electrical parameters measured by the ***CVM-Q***. Each parameters is a 32-bits long, hence two words are required to inquiry for a parameter.
FUNCTION 05	Writing one relay
FUNCTION 35 (23 Hex)	File reading (Exception to the MODBUS protocol).

a.- Registers assigned to different parameters measured by the *CVM-Q*:

PARAMETER	Units	MODBUS REGISTERS HEXA-DECIMAL (longs)		
		PRESENT Value	MAXIMUM Value	MINIMUM Value
Phase voltage - V1	V x 10	00-01	F0-F1	126-127
Phase voltage - V2	V x 10	02-03	F2-F3	128-129
Phase voltage - V3	V x 10	04-05	F4-F5	12A-12B
Frequency	Hz x 10	06-07	F6-F7	12C-12D
%THD VL1	% x 10	08-09	F8-F9	12E-12F
%THD VL2	% x 10	0A-0B	FA-FB	130-131
%THD VL3	% x 10	0C-0D	FC-FD	132-133

NOTE: The maximum number of parameters (1 parameter = 1 long of 32 bits) that can be read in one transmission is 20.

PARAMETER (Instantaneous)	Units	MODBUS REGISTERS HEXA-DECIMAL (longs)		
		L1	L2	L3
Fundamental	V x10	0E-0F	4E-4F	8E-8F
Harmonic 2	% x10	10-11	50-51	90-91
Harmonic 3	% x10	12-13	52-53	92-93
Harmonic 4	% x10	14-15	54-55	94-95
Harmonic 5	% x10	16-17	56-57	96-97
Harmonic 6	% x10	18-19	58-59	98-99
Harmonic 7	% x10	1A-1B	5A-5B	9A-9B
Harmonic 8	% x10	1C-1D	5C-5D	9C-9D
Harmonic 9	% x10	1E-1F	5E-5F	9E-9F
Harmonic 10	% x10	20-21	60-61	A0-A1
Harmonic 11	% x10	22-23	62-63	A2-A3
Harmonic 12	% x10	24-25	64-65	A4-A5
Harmonic 13	% x10	26-27	66-67	A6-A7
Harmonic 14	% x10	28-29	68-69	A8-A9
Harmonic 15	% x10	2A-2B	6A-6B	AA-AB
Harmonic 16	% x10	2C-2D	6C-6D	AC-AD
Harmonic 17	% x10	2E-2F	6E-6F	AE-AF
Harmonic 18	% x10	30-31	70-71	B0-B1
Harmonic 19	% x10	32-33	72-73	B2-B3
Harmonic 20	% x10	34-35	74-75	B4-B5
Harmonic 21	% x10	36-37	76-77	B6-B7
Harmonic 22	% x10	38-39	78-79	B8-B9
Harmonic 23	% x10	3A-3B	7A-7B	BA-BB
Harmonic 24	% x10	3C-3D	7C-7D	BC-BD
Harmonic 25	% x10	3E-3F	7E-7F	BE-BF
Harmonic 26	% x10	40-41	80-81	C0-C1
Harmonic 27	% x10	42-43	82-83	C2-C3
Harmonic 28	% x10	44-45	84-85	C4-C5
Harmonic 29	% x10	46-47	86-87	C6-C7
Harmonic 30	% x10	48-49	88-89	C8-C9
Harmonic 31	% x10	4A-4B	8A-8B	CA-CB

EXAMPLE

INQUIRY	**0A 04 00 00 00 0E 70 B5**
0A	Peripheral number, 10 in decimal
04	Reading function
00 00	Initial address (first register)
00 0E	Number of registers to be read: 14
70B5	CRC character

ANSWER	**0A 04 1C 00 00 08 47 00 00 08 48 00 00 08 48 00 00 01 F4 00 00 00 0D 00 00 00 OC 00 00 00 0C 23 2A**
0A	Answering analyzer number , 10 in decimal
04	Reading function – the one used for the inquiry
1C	Bytes received (28)
00 00 08 47	V 1x10 (register 00 Hex), in decimal 211.9 V
00 00 08 48	V 2x10 , in decimal 212.0 V
00 00 08 48	V 3x10 , in decimal 212.0 V
00 00 01 F4	Hx x 10 , in decimal 50,0 Hz
00 00 00 0D	THD V1 x 10, in decimal 1,3 %
00 00 00 0C	THD V2 x 10, in decimal 1,2 %
00 00 00 0C	THD V3 x 10, in decimal 1,2 %
23 2A	CRC character

b.- Reading digital outputs (relays) - Function 01:

Inquiry : PP**01**0000**0008**CRC (PP = peripheral No.)

Answer : PP**01**01**XX**CRC

Where XX (hexadecimal byte) → translated to binary

b7	b6	b5	b4	b3	b2	**b1**	**b0**

bit **b0** = relay 1 (1 = ON; 0 = OFF)

bit **b1** = relay 2 (1 = ON; 0 = OFF)

c**.- Registers** assigned to the ***CVM-Q* memory management*:***:

Function	Extension	Inquiry	Answer
Deleting the quality file	EVQ	NP050835FF00*CRC*	NP050835FF00*CRC*
Deleting the standard file	STD	NP050836FF00*CRC*	NP050836FF00*CRC*
Deleting all files	STD, EVQ, EVE	NP050837FF00*CRC*	NP050837FF00*CRC*

NP: Peripheral No.

13.- APPENDIX A: Second SETUP of the *CVM-Q*

A second SET-UP menu is accessible in order to perform the configuration of the ***CVM-Q*** with other features different from factory-supplied ones. To access this menu proceed as follows:

- Being the ***CVM-Q*** powered off, simultaneously press "⬍", "**max**" and "**min**" keys.
- Holding these keys pressed, power the ***CVM-Q*** on.

Following messages will be then shown on display:

a.- COMMUNICATION PROTOCOL: MODBUS

(SETUP) PROTOCOL modbus	☞ Communication protocol in use

- Key "⬍": to validate the choice and pass to the next set-up screen:

b.- SETTING COMMUNICATION PARAMETERS

(SETUP) COM.DEFAULT no	☞ Communication parameters setting

- If YES is chosen, then the analyzer is set to **001 / 9,600 / 8 bits / N / 1 bit**
- If NO is chosen, then pressing "⇕" following options will successively appear:

(SETUP) PERIFHAIL 001	☞ Peripheral No. (001 to 255)
(SETUP) BAUD 9600	☞ Baud rate (1200 – 2400 - 4800 – 9600 – 19200 bauds)
(SETUP) PARITY no	☞ Parity (No, even and odd)
(SETUP) LONG 8 Bits	☞ Data length (8 bits)
(SETUP) STOP 1	☞ Stop bits (1 or 2)

c.- SETUP LOCKING OR UNLOCKING

```
(SETUP) LOCK
        key unlock
```

or

```
(SETUP) LOCK
        key lock
```

Press the key "**max**" to modify the choice.

- If **LOC** is set, when the SETUP is accessed the configuration parameters can be visualized but cannot be modified.
- To modify the previously set option, a **4-figure password** is required to be entered (in case that this password is not correct, this blinks and the previous menu is again accessed).

***CVM-Q* PASSWORD: 1234**

To exit this setup mode the user can either press the key RESET at any moment (WARNING: if the setup is exited by pressing the key RESET some latest modifications might not be saved in memory) or also reach the end of this 2nd SETUP mode.